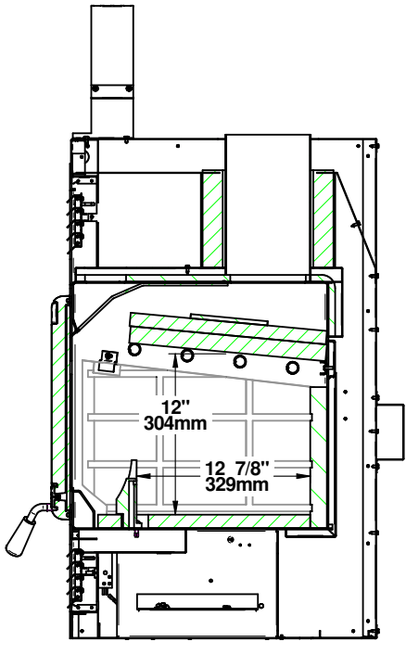
12"
304mm
12 7/8"
329mm

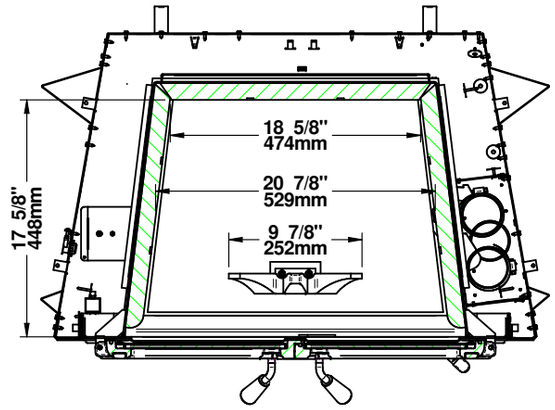
18 5/8"
474mm
20 7/8"
529mm
9 7/8"
252mm
17 5/8"
448mm

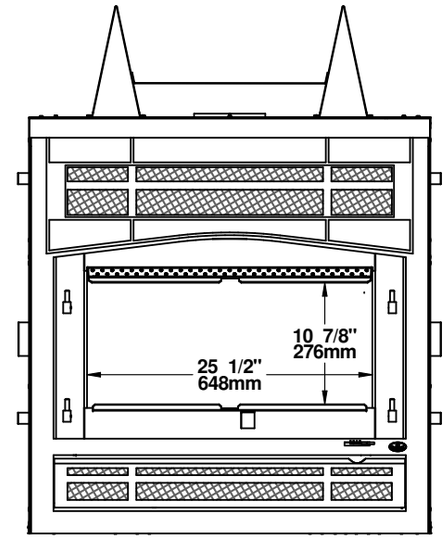
10 7/8"
276mm
25 1/2"
648mm

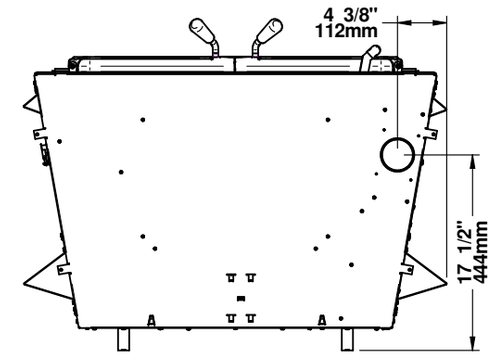
4 3/8"
112mm
17 1/2"
444mm

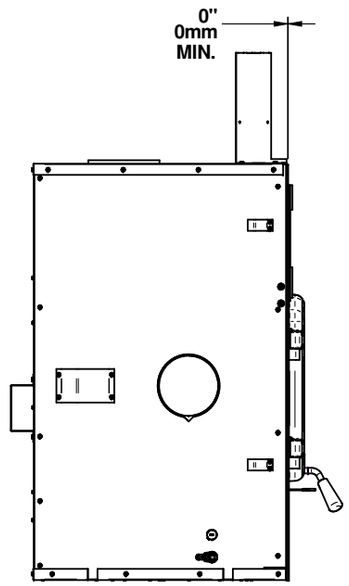
0"
0mm
MIN.

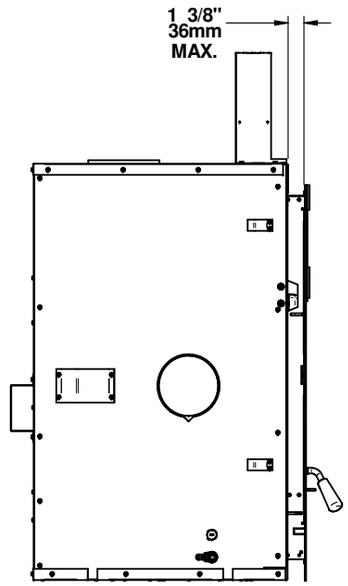
1 3/8"
36mm
MAX.

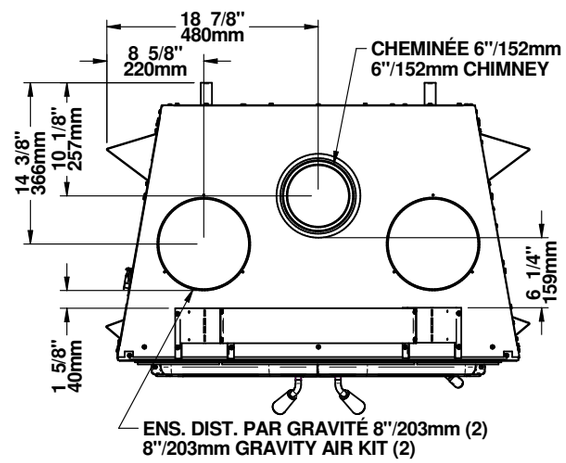
18 7/8"
480mm
8 5/8"
220mm
CHEMINÉE 6"/152mm
6"/152mm CHIMNEY
14 3/8"
366mm
10 1/8"
257mm
6 1/4"
159mm
1 5/8"
40mm
ENS. DIST. PAR GRAVITÉ 8"/203mm (2)
8"/203mm GRAVITY AIR KIT (2)

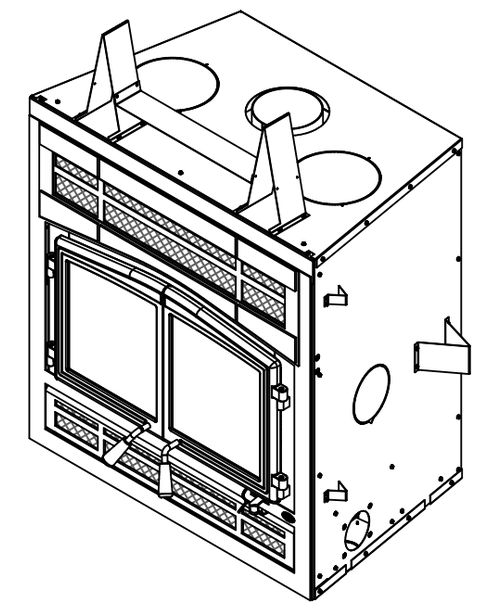

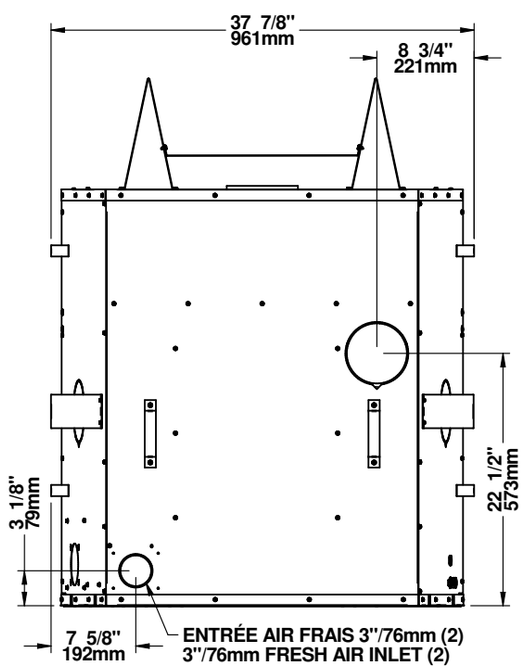
37 7/8"
961mm
8 3/4"
221mm
3 1/8"
79mm
22 1/2"
573mm
7 5/8"
192mm
ENTRÉE AIR FRAIS 3"/76mm (2)
3"/76mm FRESH AIR INLET (2)

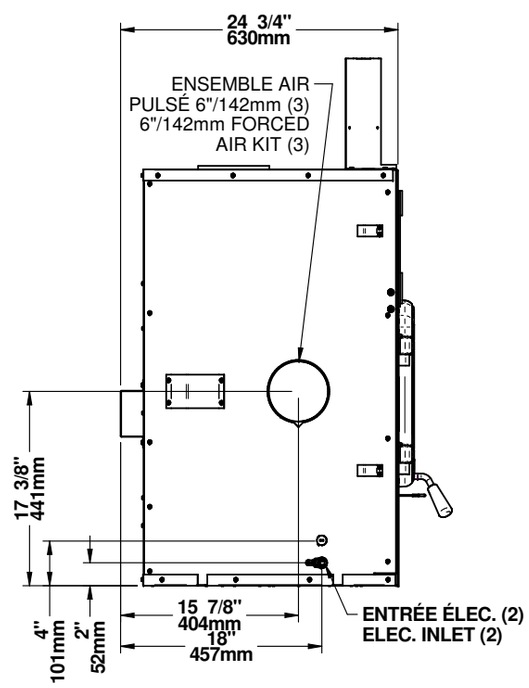
24 3/4"
630mm
ENSEMBLE AIR
PULSÉ 6"/142mm (3)
6"/142mm FORCED
AIR KIT (3)
17 3/8"
441mm
4"
101mm
2"
52mm
15 7/8"
404mm
18"
457mm
ENTRÉE ÉLEC. (2)
ELEC. INLET (2)

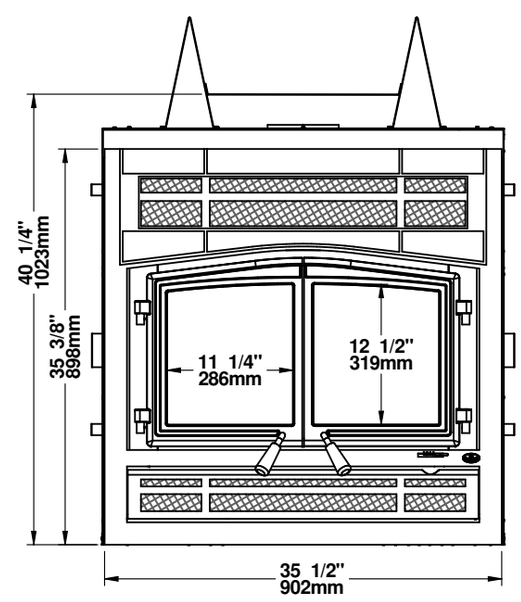
40 1/4"
1023mm
35 3/8"
898mm
11 1/4"
286mm
12 1/2"
319mm
35 1/2"
902mm

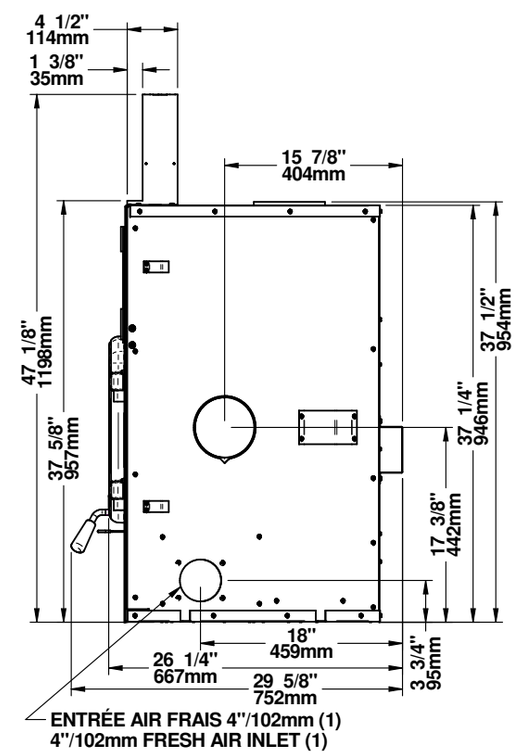
4 1/2"
114mm
1 3/8"
35mm
15 7/8"
404mm
47 1/8"
1198mm
37 5/8"
957mm
37 1/2"
954mm
37 1/4"
946mm
17 3/8"
442mm
18"
459mm
26 1/4"
667mm
29 5/8"
752mm
3 3/4"
95mm
ENTRÉE AIR FRAIS 4"/102mm (1)
4"/102mm FRESH AIR INLET (1)