INSTALLER: LEAVE THIS MANUAL WITH THE APPLIANCE.
CONSUMER: RETAIN THIS MANUAL FOR FUTURE REFERENCE.
NEVER LEAVE CHILDREN OR OTHER AT RISK INDIVIDUALS ALONE WITH THE APPLIANCE.

NAPOLEON®
QUALITY FIREPLACES

INSTALLATION AND OPERATING INSTRUCTIONS

CERTIFIED UNDER CANADIAN AND AMERICAN NATIONAL STANDARDS: ANSI Z21.50 • CSA 2.22 FOR VENTED GAS FIREPLACES.

LHD50SSN
LHD50SSN2
NATURAL GAS

MADE WITH SWAROVSKI ELEMENTS

LHD50SSP
LHD50PSS2
PROPANE

CERTIFIED FOR CANADA AND UNITED STATES USING ANSI/CSA METHODS.

SAFETY INFORMATION

⚠ WARNING

If the information in these instructions are not followed exactly, a fire or explosion may result causing property damage, personal injury or loss of life.

- Do not store or use gasoline or other flammable vapors and liquids in the vicinity of this or any other appliance.
- WHAT TO DO IF YOU SMELL GAS:
- **Do not try to light any appliance.**
- **Do not touch any electrical switch; do not use any phone in your building.**
- **Immediately call your gas supplier from a neighbour's phone. Follow the gas supplier's instructions.**
- **If you cannot reach your gas supplier, call the fire department.**

- Installation and service must be performed by a qualified installer, service agency or the supplier.

This appliance may be installed in an aftermarket, permanently located, manufactured home (USA only) or mobile home, where not prohibited by local codes.

This appliance is only for use with the type of gas indicated on the rating plate. This appliance is not convertible for use with other gases, unless a certified kit is used.

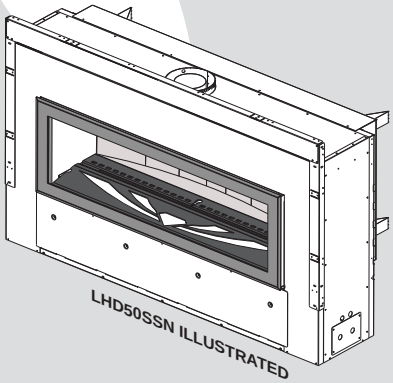

⚠ WARNING

HOT GLASS WILL CAUSE BURNS.

DO NOT TOUCH GLASS UNTIL COOLED.

NEVER ALLOW CHILDREN TO TOUCH GLASS.

APPLY SERIAL NUMBER LABEL FROM CARTON
Serial No. XXXXXX000000
MODEL NO.

HPBA Hearth, Patio & Barbecue Association
GO GREEN ECO-FRIENDLY TECHNOLOGY
Quality System Certified To ISO 9001-2008

Wolf Steel Ltd., 24 Napoleon Rd., Barrie, ON, L4M 0G8 Canada /
103 Miller Drive, Crittenden, Kentucky, USA, 41030
Phone (705)721-1212 • Fax (705)722-6031 • www.napoleonfireplaces.com • ask@napoleonproducts.com

$10.00
1.36A
W415-0839 / C / 02.03.12

TABLE OF CONTENTS

1.0	INSTALLATION OVERVIEW	3
2.0	**INTRODUCTION**	**4**
2.1	DIMENSIONS	5
2.2	GENERAL INSTRUCTIONS	6
2.3	GENERAL INFORMATION	7
2.4	RATING PLATE / LIGHTING INSTRUCTION LOCATION	8
2.5	SHIPPING HANDLES	9
3.0	**VENTING**	**10**
3.1	VENTING LENGTHS AND COMPONENTS FOR DIRECT VENT INSTALLATIONS	10
3.2	TYPICAL VENT INSTALLATIONS	11
3.3	SPECIAL VENT INSTALLATION	12
3.3.1	PERISCOPE TERMINATION	12
3.4	MINIMUM AIR TERMINAL LOCATION CLEARANCES	13
3.5	VENT APPLICATION FLOW CHART	14
3.6	DEFINITIONS	14
3.7	ELBOW VENT LENGTH VALUES	14
3.8	HORIZONTAL TERMINATION	15
3.9	VERTICAL TERMINATION	17
4.0	**INSTALLATION**	**19**
4.1	WALL AND CEILING PROTECTION	19
4.1.1	HORIZONTAL INSTALLATION	20
4.1.2	VERTICAL INSTALLATION	20
4.2	USING FLEXIBLE VENT COMPONENTS	21
4.2.1	HORIZONTAL AIR TERMINAL INSTALLATION	21
4.2.2	VERTICAL AIR TERMINAL INSTALLATION	22
4.2.3	APPLIANCE VENT CONNECTION	23
4.3	MOBILE HOME INSTALLATION	23
4.4	GAS INSTALLATION	24
5.0	**FRAMING**	**25**
5.1	TWO SIDED APPLIANCE	26
5.2	ONE SIDE APPLIANCE	28
5.3	MINIMUM CLEARANCE TO COMBUSTIBLE ENCLOSURES	30
5.4	INSTALLING CEMENT BOARD	33
5.5	ALCOVE INSTALLATION	35
5.6	MINIMUM COMBUSTIBLE MANTEL CLEARANCES	36
6.0	**FINISHING**	**37**
6.1	BEVELLED TRIM REMOVAL	37
6.2	DOOR REMOVAL / INSTALLATION	38
6.4	MEDIA INSTALLATION	39
6.3	UNIQUE INSTALLATIONS	39
7.0	**ELECTRICAL CONNECTION**	**40**
7.1	HARD WIRING CONNECTION	40
7.2	RECEPTACLE WIRING DIAGRAM	41
7.3	REMOTE RECEIVER INSTALLATION	41
7.4	SCHEMATIC	42
8.0	**OPERATION**	**43**
8.1	GENERAL TRANSMITTER LAYOUT	43
8.2	APPLIANCE OPERATION	43
8.3	HAND HELD REMOTE OPERATIONS	44
8.4	TEMPERATURE DISPLAY	44
8.5	ROOM THERMOSTAT	44
8.6	SMART THERMOSTAT	44
8.7	FLAME HEIGHT	45
8.8	CHILD PROOF FUNCTION	45
8.9	CRYSTALITES	45
8.10	LOW BATTERY / MANUAL BYPASS	46
8.11	IN THE EVENT OF A POWER FAILURE	46
8.12	CONTROL MODULE	46
8.13	ANTI CONDENSATION CONTROL SWITCH	46
9.0	**OPERATING INSTRUCTIONS**	**47**
10.0	**ADJUSTMENT**	**48**
10.1	RESTRICTING VERTICAL VENTS	48
10.2	PILOT BURNER ADJUSTMENT	48
10.3	VENTURI ADJUSTMENT	49
10.4	FLAME CHARACTERISTICS	49

<u>NOTE:</u> Changes, other than editorial, are denoted by a vertical line in the margin.

11.0	**MAINTENANCE**	**50**
11.1	CONTROL ACCESS	50
11.2	VALVE TRAIN ASSEMBLY	51
11.3	VALVE REMOVAL	51
11.4	BURNER REMOVAL	52
11.5	CONTROL MODULE REMOVAL	52
11.6	IPI BOARD AND AC ADAPTOR ACCESS	52
11.7	LAMP REPLACEMENT	53
11.8	LENS ASSEMBLY REPLACEMENT	53
11.9	PORCELAIN WRAP REMOVAL	54
11.10	DOOR LATCH REPLACEMENT	54
11.11	GLASS / DOOR REPLACEMENT	55
11.12	CARE OF GLASS	55
11.13	CARE OF PLATED PARTS	55
12.0	**REPLACEMENTS**	**56**
13.0	**TROUBLESHOOTING**	**59**
14.0	**WARRANTY**	**62**
15.0	**SERVICE HISTORY**	**63**

1.0 INSTALLATION OVERVIEW

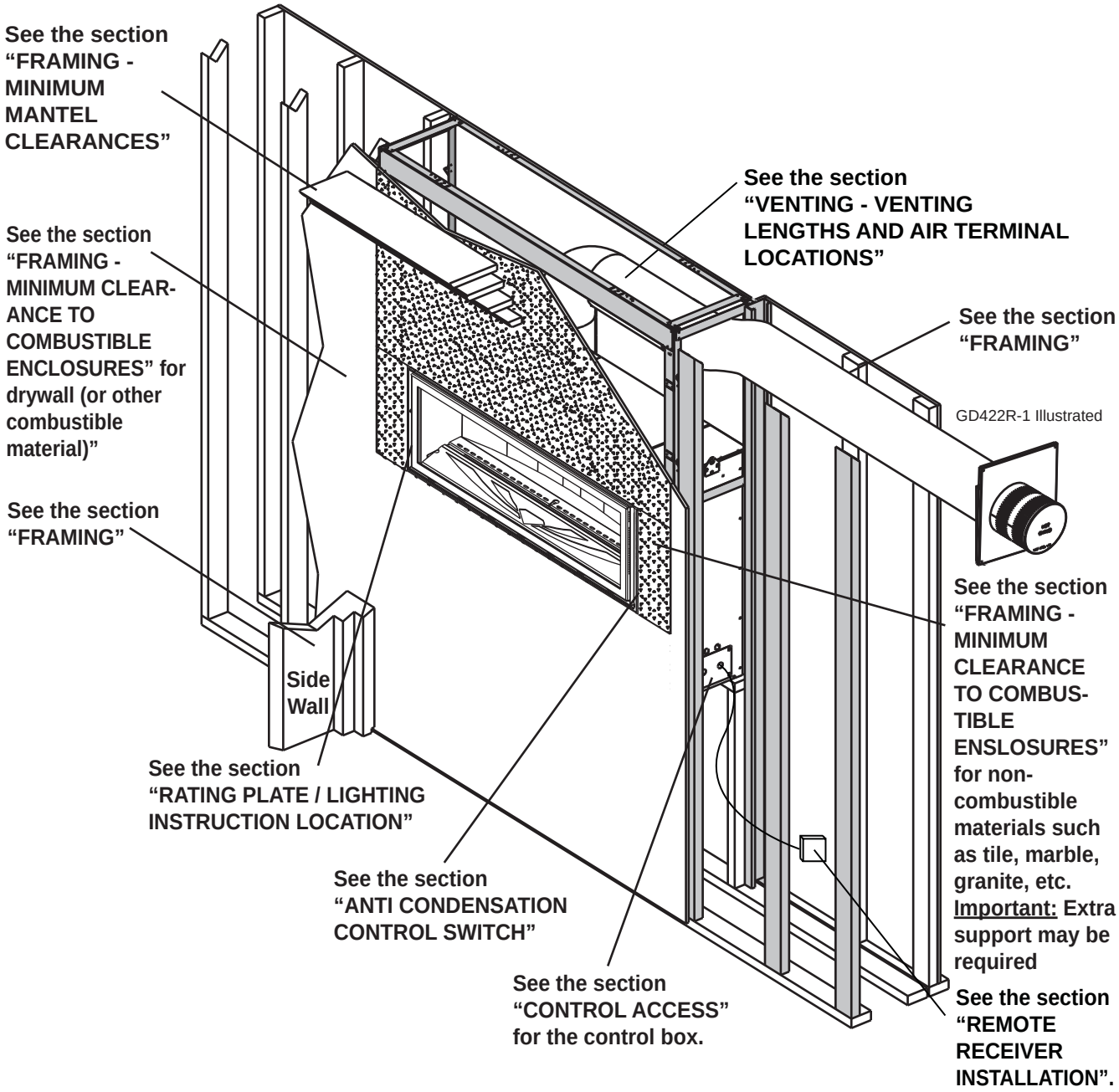

2.0 INTRODUCTION

⚠ WARNING

- **THIS APPLIANCE IS HOT WHEN OPERATED AND CAN CAUSE SEVERE BURNS IF CONTACTED.**
- **ANY CHANGES OR ALTERATIONS TO THIS APPLIANCE OR ITS CONTROLS CAN BE DANGEROUS AND IS PROHIBITED.**
- Do not operate appliance before reading and understanding operating instructions. Failure to operate appliance according to operating instructions could cause fire or injury.
- Risk of fire or asphyxiation do not operate appliance with fixed glass removed.
- Do not connect 110 volts to the control valve.
- Risk of burns. The appliance should be turned off and cooled before servicing.
- Do not install damaged, incomplete or substitute components.
- Risk of cuts and abrasions. Wear protective gloves and safety glasses during installation. Sheet metal edges may be sharp.
- Do not burn wood or other materials in this appliance.
- Children and adults should be alerted to the hazards of high surface temperature and should stay away to avoid burns or clothing ignition.
- Young children should be carefully supervised when they are in the same room as the appliance. Toddlers, young children and others may be susceptible to accidental contact burns. A physical barrier is recommended if there are at risk individuals in the house. To restrict access to an appliance, install an adjustable safety gate to keep toddlers, young children and other at risk individuals out of the room and away from hot surfaces.
- Clothing or other flammable material should not be placed on or near the appliance.
- Due to high temperatures, the appliance should be located out of traffic and away from furniture and draperies.
- Ensure you have incorporated adequate safety measure to protect infants/toddlers from touching hot surfaces.
- Even after the appliance is out, the glass and/or screen will remain hot for an extended period of time.
- Check with your local hearth specialty dealer for safety screens and hearth guards to protect children from hot surfaces. These screens and guards must be fastened to the floor.
- Any safety screen or guard removed for servicing must be replaced prior to operating the appliance.
- The appliance is a vented gas-fired appliance. Do not burn wood or other materials in the appliance
- It is imperative that the control compartments, burners and circulating blower and its passageway in the appliance and venting system are kept clean. The appliance and its venting system should be inspected before use and at least annually by a qualified service person. More frequent cleaning may be required due to excessive lint from carpeting, bedding material, etc. The appliance area must be kept clear and free from combustible materials, gasoline and other flammable vapors and liquids.
- Under no circumstances should this appliance be modified.
- This appliance must not be connected to a chimney flue pipe serving a separate solid fuel burning appliance.
- Do not use this appliance if any part has been under water. Immediately call a qualified service technician to inspect the appliance and to replace any part of the control system and any gas control which has been under water.
- Do not operate the appliance with the glass door removed, cracked or broken. Replacement of the glass should be done by a licensed or qualified service person.
- Do not strike or slam shut the appliance glass door.
- When equipped with pressure relief doors, they must be kept closed while the appliance is operating to prevent exhaust fumes containing carbon monoxide, from entering into the home. Temperatures of the exhaust escaping through these openings can also cause the surrounding combustible materials to overheat and catch fire.
- Only doors / optional fronts certified with the appliance are to be installed on the appliance.
- Keep the packaging material out of reach of children and dispose of the material in a safe manner. As with all plastic bags, these are not toys and should be kept away from children and infants.
- As with any combustion appliance, we recommend having your appliance regularly inspected and serviced as well as having a Carbon Monoxide Detector installed in the same area to defend you and your family against Carbon Monoxide.
- Ensure clearances to combustibles are maintained when building a mantel or shelves above the appliance. Elevated temperatures on the wall or in the air above the appliance can cause melting, discolouration or damage of decorations, a T.V. or other electronic components.

3.2B

2.1 DIMENSIONS

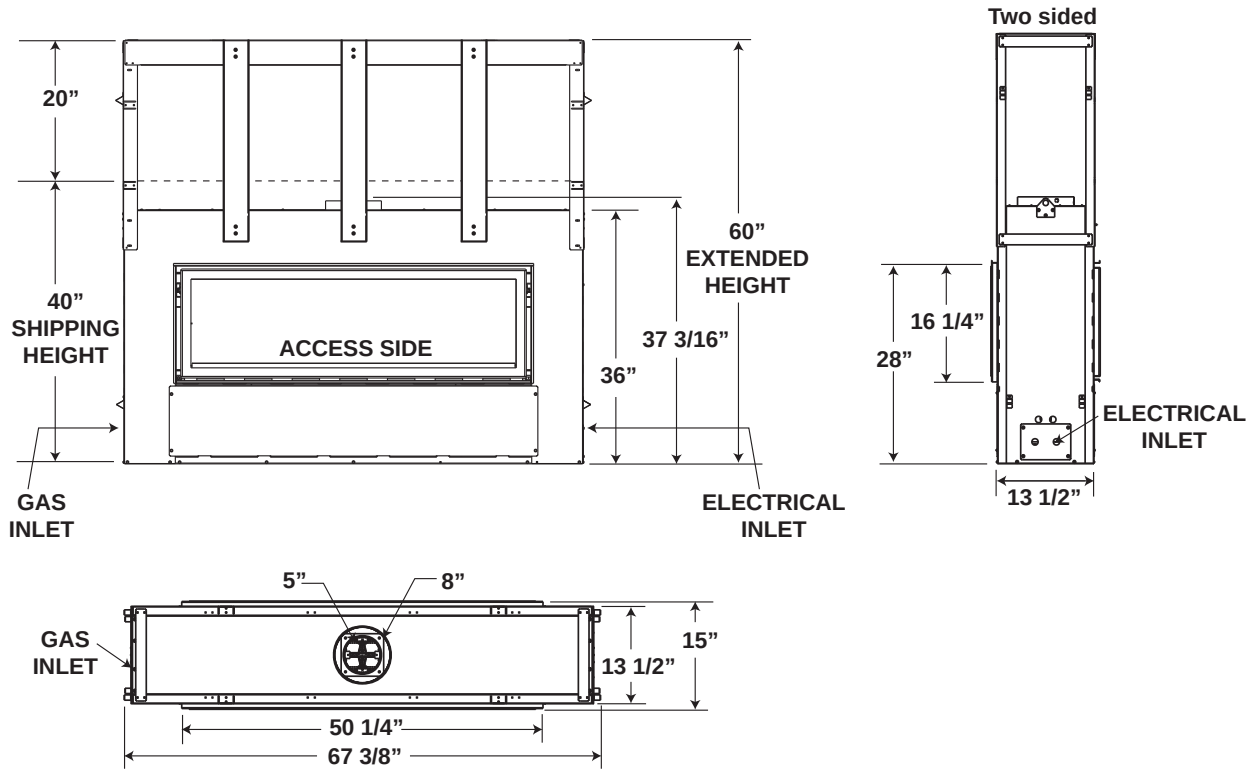

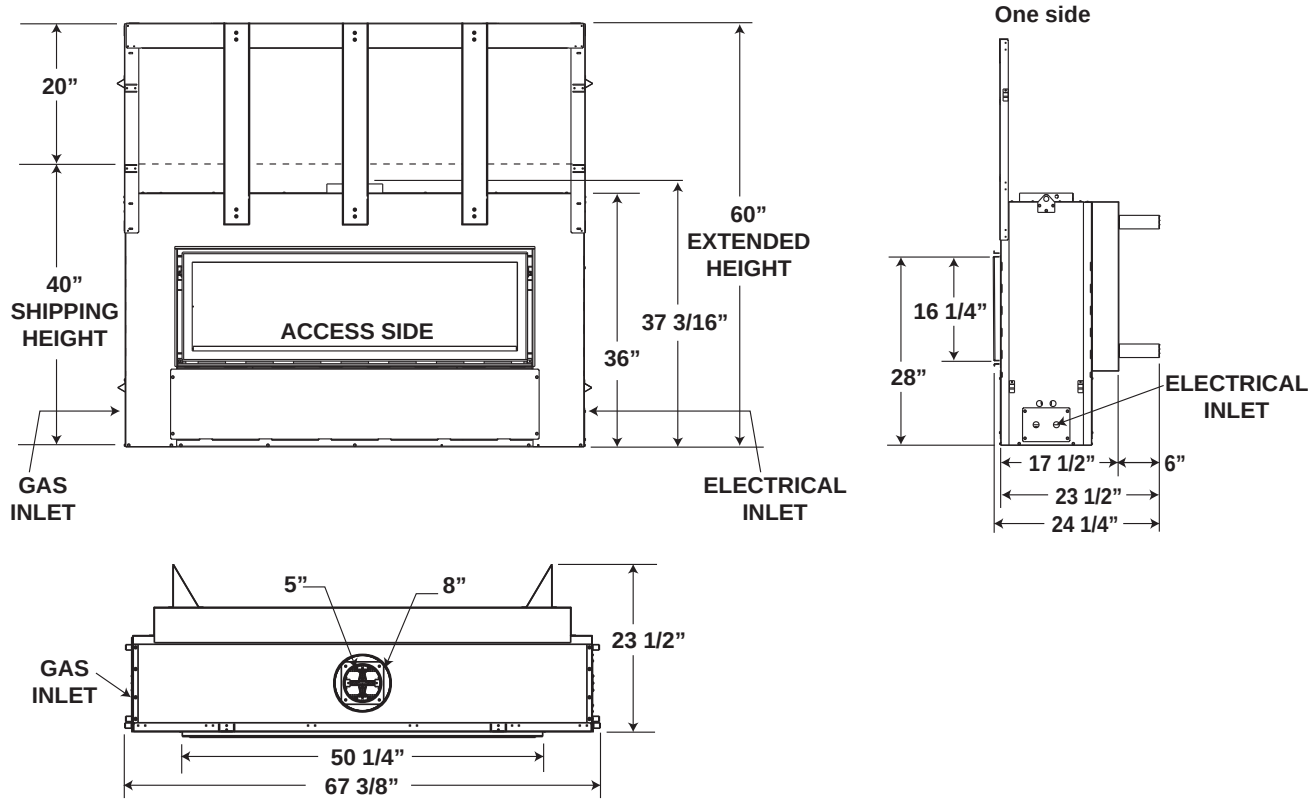

2.2 GENERAL INSTRUCTIONS

⚠ WARNING
ALWAYS LIGHT THE PILOT WHETHER FOR THE FIRST TIME OR IF THE GAS SUPPLY HAS RUN OUT, WITH THE GLASS DOOR OPENED OR REMOVED.
PROVIDE ADEQUATE CLEARANCE FOR SERVICING AND OPERATING THE APPLIANCE.
PROVIDE ADEQUATE VENTILATION.
NEVER OBSTRUCT THE FRONT OPENING OF THE APPLIANCE.
OBJECTS PLACED IN FRONT OF THE APPLIANCE MUST BE KEPT A MINIMUM OF 48" FROM THE FRONT FACE OF THE APPLIANCE.
SURFACES AROUND AND ESPECIALLY ABOVE THE APPLIANCE CAN BECOME HOT. AVOID CONTACT WHEN THE APPLIANCE IS OPERATING.
FIRE RISK. EXPLOSION HAZARD. **HIGH PRESSURE WILL DAMAGE VALVE. DISCONNECT GAS SUPPLY PIPING BEFORE PRESSURE TESTING GAS LINE AT TEST PRESSURES ABOVE 1/2 PSIG. CLOSE THE MANUAL SHUT-OFF VALVE BEFORE PRESSURE TESTING GAS LINE AT TEST PRESSURES EQUAL TO OR LESS THAN 1/2 PSIG.**
USE ONLY WOLF STEEL APPROVED OPTIONAL ACCESSORIES AND REPLACEMENT PARTS WITH THIS APPLIANCE. USING NON-LISTED ACCESSORIES (BLOWERS, DOORS, LOUVRES, TRIMS, GAS COMPONENTS, VENTING COMPONENTS, ETC.) COULD RESULT IN A SAFETY HAZARD AND WILL VOID THE WARRANTY AND CERTIFICATION.

THIS GAS APPLIANCE SHOULD BE INSTALLED AND SERVICED BY A QUALIFIED INSTALLER to conform with local codes. Installation practices vary from region to region and it is important to know the specifics that apply to your area, for example in Massachusetts State:

- This product must be installed by a licensed plumber or gas fitter when installed within the commonwealth of Massachusetts.
- The appliance damper must be removed or welded in the open position prior to installation of a appliance insert or gas log.
- The appliance off valve must be a "T" handle gas cock.
- The flexible connector must not be longer than 36 inches.
- A Carbon Monoxide detector is required in all rooms containing gas fired appliances.
- The appliance is not approved for installation in a bedroom or bathroom unless the unit is a direct vent sealed combustion product.

The installation must conform with local codes or, in absence of local codes, the National Gas and Propane Installation Code CSA B149.1 in Canada, or the National Fuel Gas Code, ANSI Z223.1 / NFPA 54 in the United States. Suitable for mobile home installation if installed in accordance with the current standard CAN/CSA Z240MH Series, for gas equipped mobile homes, in Canada or ANSI Z223.1 and NFPA 54 in the United States.

NATIONAL FIREPLACE INSTITUTE
NFI
CERTIFIED
www.nficertified.org

We suggest that our gas hearth products be installed and serviced by professionals who are certified in the U.S. by the National Fireplace Institute® (NFI) as NFI Gas Specialists

As long as the required clearance to combustibles is maintained, the most desirable and beneficial location for an appliance is in the center of a building, thereby allowing the most efficient use of the heat created. The location of windows, doors and the traffic flow in the room where the appliance is to be located should be considered. If possible, you should choose a location where the vent will pass through the house without cutting a floor or roof joist.

If the appliance is installed directly on carpeting, vinyl tile or other combustible material other than wood flooring, the appliance shall be installed on a metal or wood panel extending the full width and depth.

Some appliances have optional fans or blowers. If an optional fan or blower is installed, the junction box must be electrically connected and grounded in accordance with local codes, use the current CSA C22.1 Canadian Electrical Code in Canada or the ANSI/NFPA 70 National Electrical code in the United States.

4.1A

2.3 GENERAL INFORMATION

FOR YOUR SATISFACTION, THIS APPLIANCE HAS BEEN TEST-FIRED TO ASSURE ITS OPERATION AND QUALITY!

LHD50		
	NG	**LP**
Altitude (FT)	0-4,500	0-4500
Max. Input (BTU/HR)	30,000	30,000
Max. Output (BTU/HR)	24,000	24,000
Efficiency (w/the fan on)	79%	79%
Min. Inlet Gas Supply Pressure	4.5" Water Column	11" Water Column
Max. Inlet Gas Supply Pressure	7" Water Column	13" Water Column
Manifold Pressure (Under Flow Conditions)	3.5" Water Column	10" Water Column

When the appliance is installed at elevations above 4,500ft, and in the absence of specific recommendations from the local authority having jurisdiction, the certified high altitude input rating shall be reduced at the rate of 4% for each additional 1,000ft. Expansion / contraction noises during heating up and cooling down cycles are normal and are to be expected. Change in flame appearance from “HI” to “LO” is more evident in natural gas than in propane.

This appliance is approved for bathroom, bedroom and bed-sitting room installations and is certified for mobile home installation.

This appliance is only for use with the type of gas indicated on the rating plate. This appliance is not convertible for use with other gases, unless a certified kit is used.

There are two switches that control the function of the appliance. One on the receiver that must be placed in the middle position. The other is on the control module that must be in the “I” position, which denotes on. If these switches aren’t in these locations the appliance will not work, see “REMOTE RECEIVER INSTALLATION” and “CONTROL MODULE” section.

NOTE: The protective wrap on plated parts is best removed when the assembly is at room temperature but this can be improved if the assembly is warmed, using a hair dryer or similar heat source.

This appliance is equipped with a remote control system, which requires batteries (supplied) to be installed. The transmitter takes 3 “AAA” batteries and in the case of a power failure the receiver takes 4 “AA” batteries.

2.4 RATING PLATE / LIGHTING INSTRUCTION LOCATION

⚠ WARNING

ALLOW THE APPLIANCE TO COOL BEFORE PERFORMING ANY MAINTENANCE OR CLEANING.

Both the rating plate and lighting instructions are attached to a key chain and inserted in a mail slot on the left side of the appliance (access side). It is recommended to remove the door prior to instruction removal. Using your fingers or a tool such as a screw driver or pencil, gently pull both chains toward you. With the chain at the bulb end of the slot, wiggle the rating plate out being careful not to tear the instructions as they pass through the slot.

To replace, slide the instructions and the chain back through the slot and re-attach the door (if removed).

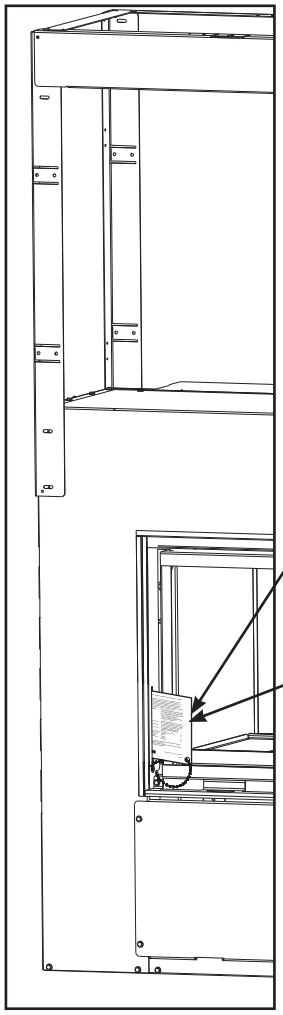

KEEP BURNER AND CONTROL COMPARTMENT CLEAN. SEE INSTALLATION AND OPERATING INSTRUCTIONS MANUAL. APPLIANCE NEEDS FRESH AIR FOR SAFE OPERATION AND MUST BE INSTALLED WITH ADEQUATE PROVISIONS FOR COMBUSTION AND VENTILATION AIR.

GARDEZ LE BRULEUR ET LE COMPARTIMENT DES CONTROLES PROPRES. CONSULTEZ LE MANUEL D'INFORMATION ET D'INSTALLATION. PAR MESURE DE SECURITE. CET APPAREIL DOIT ETRE ALIMENTE EN AIR FRAIS ET AVEC SUFFISANT D'AIR COMBURANTET DE VENTILATION.

WARNING:

IMPROPER INSTALLATION, ADJUSTMENT, ALTERATION, SERVICE OR MAINTENANCE CAN CAUSE PROPERTY DAMAGE, PERSONAL INJURY OR LOSS OF LIFE. REFER TO OWNER'S MANUAL. INSTALLATION AND SERVICE MUST BE PERFORMED BY A QUALIFIED INSTALLER, SERVICE AGENCY OR THE GAS SUPPLIER.

ATTENTION:

UN INSTALLATION OU UNE MODIFICATION INAPPROPRIEE DU REGLAGE, DU SERVICE ET DE L'ENTRETIEN POURRAIENT ETRE LA CAUSE DE DOMMAGES A LA PROPRIETE DE BLESSURES CORPORELLES OU MEME LA MORT. CONSULTER LE MANUEL D'INFORMATION, L'INSTALLATION ET LE SERVICE DOIVENT ETRE EXECUTES PAR UN INSTALLATEUR QUALIFIE POUR LE AZ, UNE ENTREPRISE DE SERVICE OU LE FOURNISSEUR DE GAZ SEULEMENT.

CAUTION:
HOT WHILE OPERATING. DO NOT TOUCH. KEEP CHILDREN, CLOTHING, FURNITURE, GASOLINE OR OTHER FLAMMABLE VAPORS AWAY.

AVERTISSEMENT:
L'APPAREIL EST CHAUD PENDANT SON FONCTIONNEMENT. LES ENFANTS, LES VETEMENTS, LES MEUBLES, L'ESSENCE ET AUTRES LIQUIDES QUI EMETTENT DES GAZ VOLATILS INFLAMMABLES DOIVENT ETRE TENUS ELOIGNES DE L'APPAREIL.

"This appliance is only for use with the type(s) of gas indicated on the rating plate and may be installed in an aftermarket, permanently located, manufactured home (USA only) or mobile home, where not prohibited by local codes. See owner's manual for details. This appliance is supplied with a conversion kit."

«Cet appareil doit être utilisé uniquement avec les types de gaz indiqués sur la plaque signalétique et peut être installé dans une maison préfabriquée (E.-U. seulement) ou mobile installée à demeure, si les règlements locaux le permettent. Voir la notice de l'utilisateur pour plus de renseignements. Une trousse de conversion est fournie avec cet appareil.»

FOR YOUR SAFETY:
DO NOT STORE OR USE GASOLINE OR OTHER FLAMMABLE VAPORS AND LIQUIDS IN VICINITY OF THIS OR ANY OTHER APPLIANCE.

CAUTION: DO NOT OPERATE THE FIREPLACE WITH THE GLASS REMOVED, CRACKED OR BROKEN. REPLACEMENT OF THE GLASS SHOULD BE DONE BY A LICENSED OR QUALIFIED PERSON.

POUR VOTRE SECURITE:
NE PAS ENTREPOSER NI UTILISER D'ESSENCE NI D'AUTRES VAPEURS OU LIQUIDES INFLAMMABLES ANS LE VOISINAGE DE CET APPAREIL OU DE TOUT AUTRE APPAREIL.

AVERTISSEMENT: NE PAS UTILISER L'APPAREIL SI LE PANNEAU FRONTAL EN VERRE N'EST PAS EN PLACE, EST CRAQUÉ OU BRISÉ. CONFIEZ LE REMPLACEMENT DU PANNEAU À UN TECHNICIEN AGRÉÉ.

CERTIFIED FOR / CERTIFIEE POUR CANADA / USA
REFERENCE # 161746

CERTIFIED UNDER / HOMOLOGUE SELON LES NORMES: ANSI Z21.50 - 2007 • CSA 2.22 - 2007 VENTED GAS FIREPLACE / FOYER AU GAZ VENTILÉ
VENTED GAS FIREPLACE. APPROVED FOR BEDROOM, BATHROOM AND BED-SITTING ROOM INSTALLATION. SUITABLE FOR MOBILE HOME INSTALLATION IF INSTALLED IN ACCORDANCE WITH THE CURRENT STANDARD CAN/CSA Z240MH SERIES GAS EQUIPPED MOBILE HOMES, IN CANADA OR IN THE UNITED STATES THE MANUFACTURED HOME CONSTRUCTION AND SAFETY STANDARD, TITLE 24 CFR, PART 3280. WHEN THE US STANDARD IS NOT APPLICABLE USE THE STANDARD FOR FIRE SAFETY CRITERIA FOR MANUFACTURED HOME INSTALLATIONS, SITES AND COMMUNITIES, ANSI / NFPA 501A. FOYER DE CHAUFFAGE AU GAZ AVEC ÉVACUATION. HOMOLOGUÉ POUR INSTALLATION DANS UNE CHAMBRE À COUCHER, UNE SALLE DE BAIN ET UN STUDIO. APPROPRIÉ POUR INSTALLATION DANS UNE MAISON MOBILE SI SON INSTALLATION CONFORME AUX EXIGENCES DE LA NORME C/AN/CSA Z240MH SÉRIE DE MAISONS MOBILES ÉQUIPÉES AU GAZ, EN VIGUEUR AU CANADA OU AUX ÉTATS-UNIS DE LA NORME DE SÉCURITÉ ET DE CONSTRUCTION DE MAISONS MANUFACTURÉES, TITRE 24 CFR, SECTION 3280. DANS LE CAS OU CETTE NORME D'ÉTATS-UNIS NE PEUT ÉTRE APPLIQUÉE, SE RÉFÉRER A LA NORME RELATIVE AU CRITÈRE DE MESURES DE SÉCURITÉ CONTRE L'INCENDIE POUR LES INSTALLATIONS DANS LES MAISONS MANUFACTURÉS, LES SITES ET LES COMMUNAUTÉS, ANSI/NFPA 501A.
THIS APPLIANCE MUST BE INSTALLED IN ACCORDANCE WITH LOCAL CODES. IF ANY; IF NONE, FOLLOW THE CURRENT ANSI Z223.1, OR CSA B149, INSTALLATION CODES./INSTALLER L'APPAREIL SELON LES CODES OU RÈGLEMENTS LOCAUX QU'EN L'ABSENCE DE TELS RÈGLEMENTS, SELON LES CODES D'INSTALLATION ANSI Z223.1 OU CSA-B149 EN VIGUEUR.

NOT FOR USE WITH SOLID FUEL. FOR USE WITH GLASS DOORS CERTIFIED WITH THIS UNIT ONLY.

WARNING: DO NOT ADD ANY MATERIAL TO THE APPLIANCE, WHICH WILL COME IN CONTACT WITH THE FLAMES, OTHER THAN THAT SUPPLIED BY THE MANUFACTURER WITH THE APPLIANCE.

MINIMUM CLEARANCE TO COMBUSTIBLE MATERIALS:

TOP	0"
FLOOR	0"
RECESSED DEPTH ONE SIDED	23.75"
RECESSED DEPTH SEE THRU	13.5"
FRAMING (NOT INCLUDING FACE MATERIAL)	
SIDES	0"
BACK	0"
VENT TOP	3"
VENT SIDES & BOTTOM	2"
VERTICAL VENT	2"
MANTLE	18" *

TOP, SIDES & BACK: PER STAND OFF SPACERS FOR FRAMING MATERIALS. FOR FINISHING MATERIALS SEE OWNERS MANUAL
* MAXIMUM HORIZONTAL EXTENSION / L'EXTENSION HORIZONTALE MAXIMALE: 2". SEE INSTRUCTION MANUAL FOR GREATER EXTENSIONS.
SEE OWNER'S INSTRUCTION MANUAL FOR MINIMUM AND MAXIMUM VENT LENGTHS.

MODEL NATURAL GAS / GAZ NATURAL
☐ LHD50N ☐ CLHD50N

0-4500FT (0-1370M)	
30,000 BTU/H	
20,000 BTU/H	
#38	
3.5" WATER COLUMN/D'UNE COLONNE D'EAU	
4.5" WATER COLUMN/D'UNE COLONNE D'EAU	
7.0" WATER COLUMN/D'UNE COLONNE D'EAU	

ALTITUDE / ÉLÉVATION
INPUT / ALIMENTATION REDUITE
ORIFICE / INJECTEUR
MANIFOLD PRESSURE / PRESSION AU COLLECTEUR
MINIMUM SUPPLY PRESSURE / PRESSION D'ALIMENTATION MINIMALE
MAXIMUM SUPPLY PRESSURE / PRESSION D'ALIMENTATION MAXIMALE

THE APPLIANCE MUST BE VENTED USING THE APPROPRIATE NAPOLEON VENT KITS. SEE OWNERS INSTALLATION MANUAL FOR VENTING SPECIFICS. PROPER REINSTALLATION AND RESEALING IS NECESSARY AFTER SERVICING THE VENT-AIR INTAKE SYSTEM.

MODEL PROPANE/ PROPANE MODÈLE
CLHD50P ☐ LHD50P ☐

0-4500FT (0-1370M)	
30,000 BTU/H	
20,000 BTU/H	
#53	
10" WATER COLUMN/D'UNE COLONNE D'EAU	
11" WATER COLUMN/D'UNE COLONNE D'EAU	
13" WATER COLUMN/ D'UNE COLONNE D'EAU	

L'APPAREIL DOIT ÉVACUER SES GAZ EN UTILISANT L'ENSEMBLE D'ÉVACUATION PROPRE A NAPOLEON. RÉFÉRER AU MANUEL D'INSTALLATION DE PROPRIÉTAIRE POUR L'ÉVACUATION PRÉCISE. IL EST IMPORTANT DE BIEN RÉINSTALLER ET RESCELLER L'ÉVENT APRÈS AVOIR ASSURÉ LE MAINTIEN DU SYSTÈME DE PRISE D'AIR.

UN COMBUSTIBLE SOLIDE NE DOIT PAS ÉTRE UTILISÉ AVEC CET APPAREIL. UTILISER AVEC LES PORTES VITRÉES HOMOLOGUÉES SEULEMENT AVEC CETTE UNITÉ.
AVERTISSEMENT: N'AJOUTEZ PAS A CET APPAREIL AUCUN MATÉRIAU DEVANT ENTRER EN CONTACT AVEC LES FLAMMES AUTRE QUE CELUI QUI EST FOURNI AVEC CET APPAREIL PAR LE FABRICANT.
DÉGAGEMENTS MINIMAUX DES MATÉRIAUX COMBUSTIBLES:

DESSUS	0"
PLANCHER	0"
PROFONDEUR DE L'ENCLAVE FACE UNIQUE	23.75"
PROFONDEUR DE L'ENCLAVE BINAIRE	13.5"
OSSATURE (MATÉRIAU DE FAÇADE NON COMPRIS)	
CÔTÉS	0"
ARRIÈRE	0"
DESSUS DU CONDUIT D'ÉVENT	3"
CÔTÉS ET DESSOUS DU CONDUIT D'ÉVENT	2"
CONDUIT D'ÉVENT VERTICAL	2"
TABLETTE	18"

DESSUS, COTÉS & ARRIÈRE: SELON LES ESPACEURS DE DÉGAGEMENT POUR LES MATÉRIAUX D'OSSATURE SELON LA MANUEL DE PROPRIÉTAIRE POUR LES MATÉRIAUX DE FINITION.
* L'EXTENSION HORIZONTALE MAXIMALE: 2". RÉFÉRER AU MANUEL D'INSTRUCTION POUR DES EXTENSIONS PLUS GRANDES. RÉFÉRER AU MANUEL D'INSTALLATION DE PROPRIÉTAIRE.

ELECTRICAL RATING: 115V.60HZ. LESS THAN 12 AMPERES
MADE IN CANADA / FABRIQUÉ AU CANADA
WOLF STEEL LTD.BARRIE, ONTARIO, CANADA
SERIAL NUMBER/NO. DE SÉRIE: LHD50
SPÉCIFICATIONS ÉLECTRIQUES : 115 V, 60 HZ. MOINS DE 12 AMPÈRES.
W385-0448 / B

SAMPLE

<u>INSTALLER:</u> It is your responsibility to check off the appropriate box on the rating plate according to the model, venting and gas type of the appliance.

This illustration is for reference only. Refer to the rating plate on the appliance for accurate information.

2.5 SHIPPING HANDLES

IMPORTANT
This appliance fully dressed weighs 300 lbs.

A. Lift up and secure the framing kit, see “STEEL STUD FRAMING KIT” section for instructions.

B. Insert the shipping handles (not supplied) by placing the tabs in the desired slots on both sides of the appliance and lifting upwards to secure in place.

C. Remove handles once the appliance is in its preferred location. Use shipping brackets to secure base of appliance.

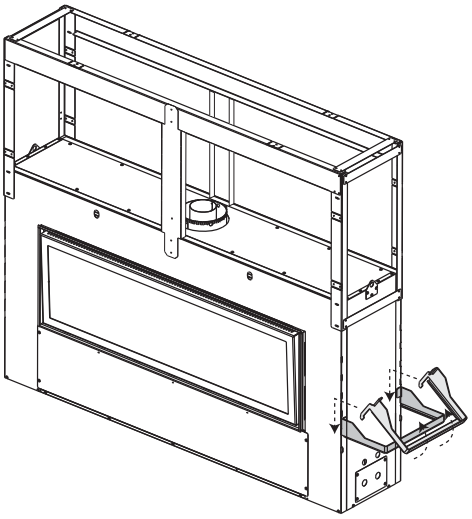

3.0 VENTING

⚠ WARNING

RISK OF FIRE, MAINTAIN SPECIFIED AIR SPACE CLEARANCES TO VENT PIPE AND APPLIANCE.

IF VENTING IS INCLUDED WITH SPACERS THE VENT SYSTEM MUST BE SUPPORTED EVERY 3 FEET FOR BOTH VERTICAL AND HORIZONTAL RUNS. USE SUPPORTS OR EQUIVALENT NON-COMBUSTIBLE STRAPPING TO MAINTAIN THE REQUIRED CLEARANCE FROM COMBUSTIBLES. USE WOLF STEEL LTD. SUPPORT RING ASSEMBLY W010-0370 OR EQUIVALENT NON-COMBUSTIBLE STRAPPING TO MAINTAIN THE MINIMUM CLEARANCE TO COMBUSTIBLES FOR BOTH VERTICAL AND HORIZONTAL RUNS. SPACERS ARE ATTACHED TO THE INNER PIPE AT PREDETERMINED INTERVALS TO MAINTAIN AN EVEN AIR GAP TO THE OUTER PIPE. THIS GAP IS REQUIRED FOR SAFE OPERATION. A SPACER IS REQUIRED AT THE START, MIDDLE AND END OF EACH ELBOW TO ENSURE THIS GAP IS MAINTAINED. THESE SPACERS MUST NOT BE REMOVED.

THIS APPLIANCE USES A 5” EXHAUST / 8” AIR INTAKE VENT PIPE SYSTEM.
Refer to the section applicable to your installation.

For safe and proper operation of the appliance follow the venting instruction exactly. Deviation from the minimum vertical vent length can create difficulty in burner start-up and/or carboning. Under extreme vent configurations, allow several minutes (5-15) for the flame to stabilize after ignition. Provide a means for visually checking the vent connection to the appliance after the appliance is installed. Use a firestop, vent pipe shield or attic insulation shield when penetrating interior walls, floor or ceiling.
NOTE: If for any reason the vent air intake system is disassembled; reinstall per the instructions provided for the initial installation.

7.2A

3.1 VENTING LENGTHS AND COMPONENTS FOR DIRECT VENT INSTALLATIONS

Use only Wolf Steel, Simpson Dura-Vent, Selkirk Direct Temp, American Metal Amerivent or Metal-Fab venting components. Minimum and maximum vent lengths, for both horizontal and vertical installations, and air terminal locations for either system are set out in this manual and must be adhered to. For Simpson Dura-Vent, Selkirk Direct Temp, American Metal Amerivent and Metal-Fab follow the installation procedure provided with the venting components.

A starter adaptor must be used with the following vent systems and may be purchased from the corresponding supplier:

PART	5”/8”	SUPPLIER	WEBSITE
Duravent	W175-0170	Wolf Steel	www.duravent.com
Amerivent	5DSC-N2	American Metal	www.americanmetalproducts.com
Direct Temp	5DT-AA	Selkirk	www.selkirkcorp.com
SuperSeal	5DDA	Metal-Fab	www.mtlfab.com

For Simpson Dura-Vent, Selkirk Direct Temp, American Metal Amerivent and Metal-Fab follow the installation procedure found on the website for your venting supplier.

For vent systems that provide seals on the inner exhaust flue, only the outer air intake joints must be sealed using a red high temperature silicone (RTV). This same sealant may be used on both the inner exhaust and outer intake vent pipe joints of all other approved vent systems except for the exhaust vent pipe connection to the appliance flue collar which must be sealed using the black high temperature sealant Mill Pac.

When using Wolf Steel venting components, use only approved Wolf Steel rigid / flexible components with the following termination kits: wall terminal kit **GD422-1**, **GD422R-1**, or 1/12 to 7/12 pitch roof terminal kit **GD410**, 8/12 to 12/12 roof terminal kit **GD411**, flat roof terminal kit **GD412** or periscope kit **GD401** (for wall penetration below grade). With flexible venting, in conjunction with the various terminations, use either the 5 foot vent kit **GD420** or the 10 foot vent kit **GD430**.

The air terminal must remain unobstructed at all times. Examine the air terminal at least once a year to verify that it is unobstructed and undamaged.
Rigid and flexible venting systems must not be combined. Different venting manufacturer components must not be combined.

These vent kits allow for either horizontal or vertical venting of the appliance. The maximum allowable horizontal run is 20 feet. The maximum allowable vertical vent length is 40 feet. The maximum number of vent connections is two horizontally or three vertically (excluding the appliance and the air terminal connections) when using flexible venting.

Horizontal runs may have a 0” rise per foot however for optimum performance it is recommended that all horizontal runs have a minimum 1/4” rise per foot using flexible venting. For safe and proper operation of the appliance, follow the venting instructions exactly.

A terminal shall not terminate directly above a sidewalk or paved driveway which is located between two single family dwellings and serves both dwellings. Local codes or regulations may require different clearances.
Do not allow the inside liner to bunch up on horizontal or vertical runs and elbows. Keep it pulled tight. A 1¼” air gap all around between the inner liner and outer liner is required for safe operation.

8.3

3.2 TYPICAL VENT INSTALLATIONS

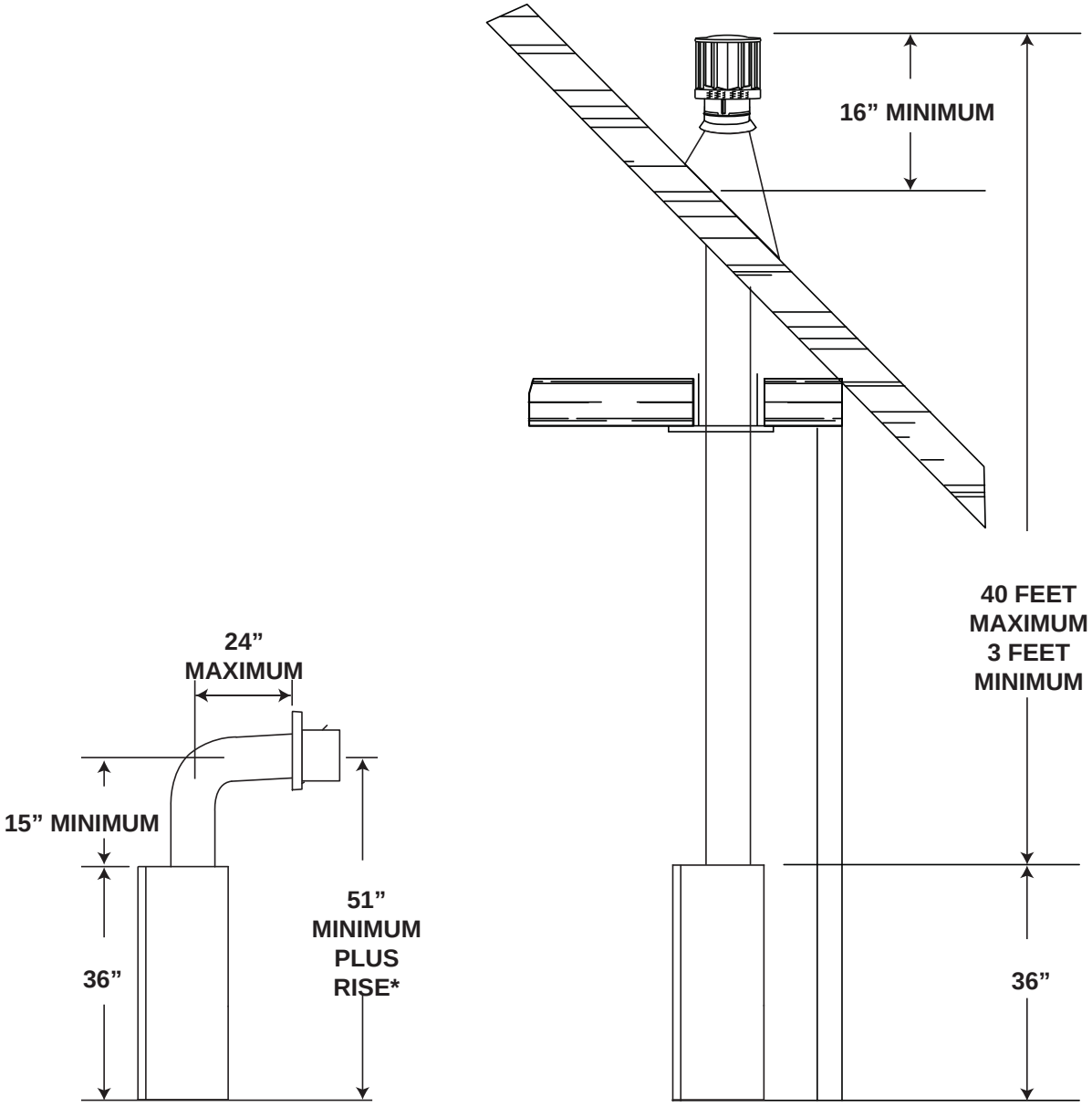

* See “VENTING” section.

3.3 SPECIAL VENT INSTALLATION

3.3.1 PERISCOPE TERMINATION

Use the periscope kit to locate the air termination above grade. The periscope must be installed so that when final grading is completed, the bottom air slot is located a minimum 12” above grade. The maximum allowable vent length is 10’ for a fireplace and 8’ for a stove.

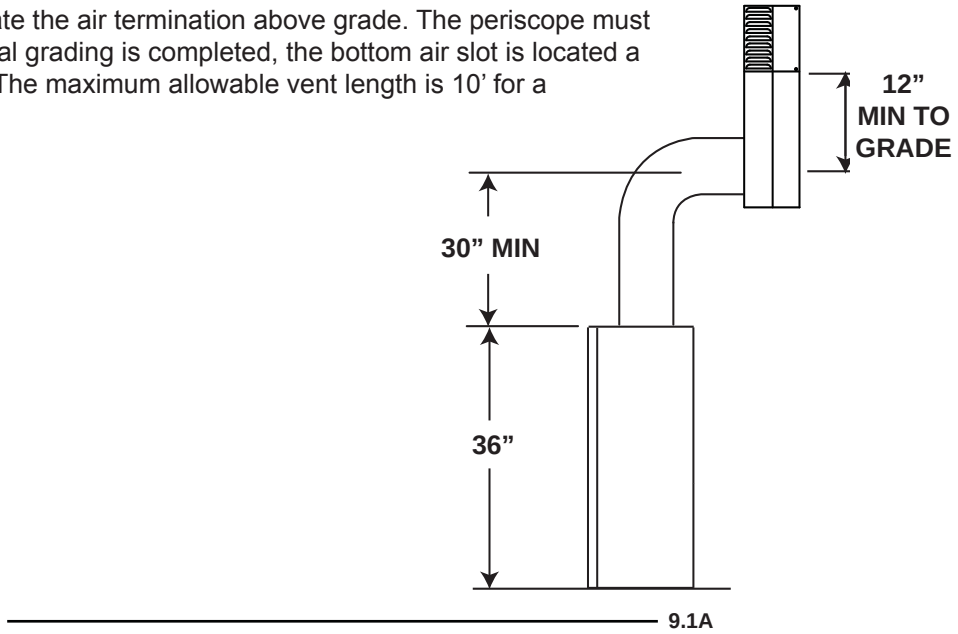

3.4 MINIMUM AIR TERMINAL LOCATION CLEARANCES

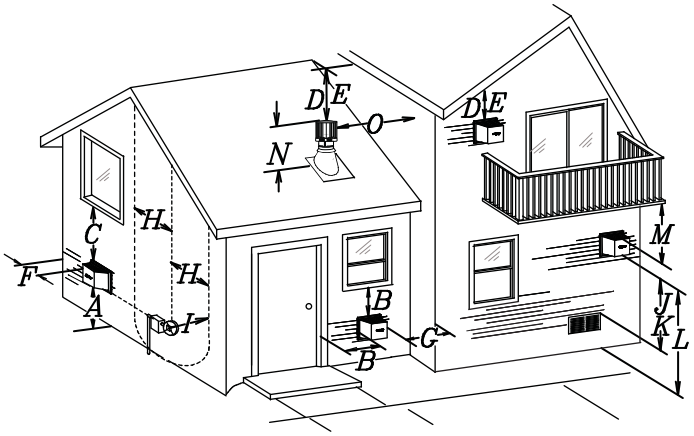

COVERED BALCONY APPLICATIONS ††*

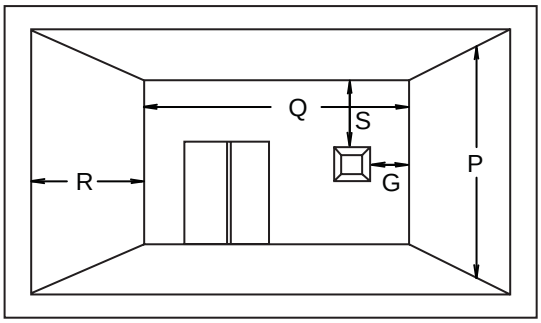

Q_{MIN}	= 3 feet
R_{MAX}	= 2 x Q_{ACTUAL}
R_{MAX}	≤ 15 feet

	INSTALLATIONS		
	CANADA	U.S.A.	
A	12”	12”	Clearance above grade, veranda porch, deck or balcony.
B	12” Δ	9” Δ	Clearance to windows or doors that open.
C	12” *	12” *	Clearance to permanently closed windows.
D	18” **	18” **	Vertical clearance to ventilated soffits located above the terminal within a horizontal distance of 2’ from the center line of the terminal.
E	12” **	12” **	Clearance to unventilated soffit.
F	0”	0”	Clearance to an outside corner wall.
G	0” ***	0” ***	Clearance to an inside **non**-combustible corner wall or protruding **non**-combustible obstructions (chimney, etc.).
	2” ***	2” ***	Clearance to an inside combustible corner wall or protruding combustible obstructions (vent chase, etc.).
H	3’	3’ ****	Clearance to each side of the center line extended above the meter / regulator assembly to a maximum vertical distance of 15’.
I	3’	3’ ****	Clearance to a service regulator vent outlet.
J	12”	9”	Clearance to a non-mechanical air supply inlet to the building or a combustion air inlet to any other appliance.
K	6’	3’ †	Clearance to a mechanical air supply inlet.
L	7’ ‡	7’ ****	Clearance above a paved sidewalk or paved driveway located on public property.
M	12” ††	12” ****	Clearance under a veranda, porch or deck.
N	16”	16”	Clearance above the roof.
O	2’ †*	2’ †*	Clearance from an adjacent wall including neighbouring buildings.
P	8’	8’	Roof must be **non**-combustible without openings.
Q	3’	3’	See chart for wider wall dimensions.
R	6’	6’	See chart for deeper wall dimensions. The terminal shall not be installed on any wall that has an opening between the terminal and the open side of the structure.
S	12”	12”	Clearance under a covered balcony

Δ The terminal shall not be located less than 6 feet under a window that opens on a horizontal plane in a structure with three walls and a roof.

* Recommended to prevent condensation on windows and thermal breakage

** It is recommended to use a heat shield and to maximize the distance to vinyl clad soffits.

*** The periscope requires a minimum 18 inches clearance from an inside corner.

**** This is a recommended distance. For additional requirements check local codes.

† 3 feet above if within 10 feet horizontally.

‡ A vent shall not terminate where it may cause hazardous frost or ice accumulations on adjacent property surfaces.

†† Permitted only if the veranda, porch, or deck is fully open on a minimum of two sides beneath the floor.

†* Recommended to prevent recirculation of exhaust products. For additional requirements check local codes.

††* Permitted only if the balcony is fully open on a minimum of one side.

NOTE: Clearances are in accordance with local installation codes and the requirements of the gas supplier.

12.1C

3.5 VENT APPLICATION FLOW CHART

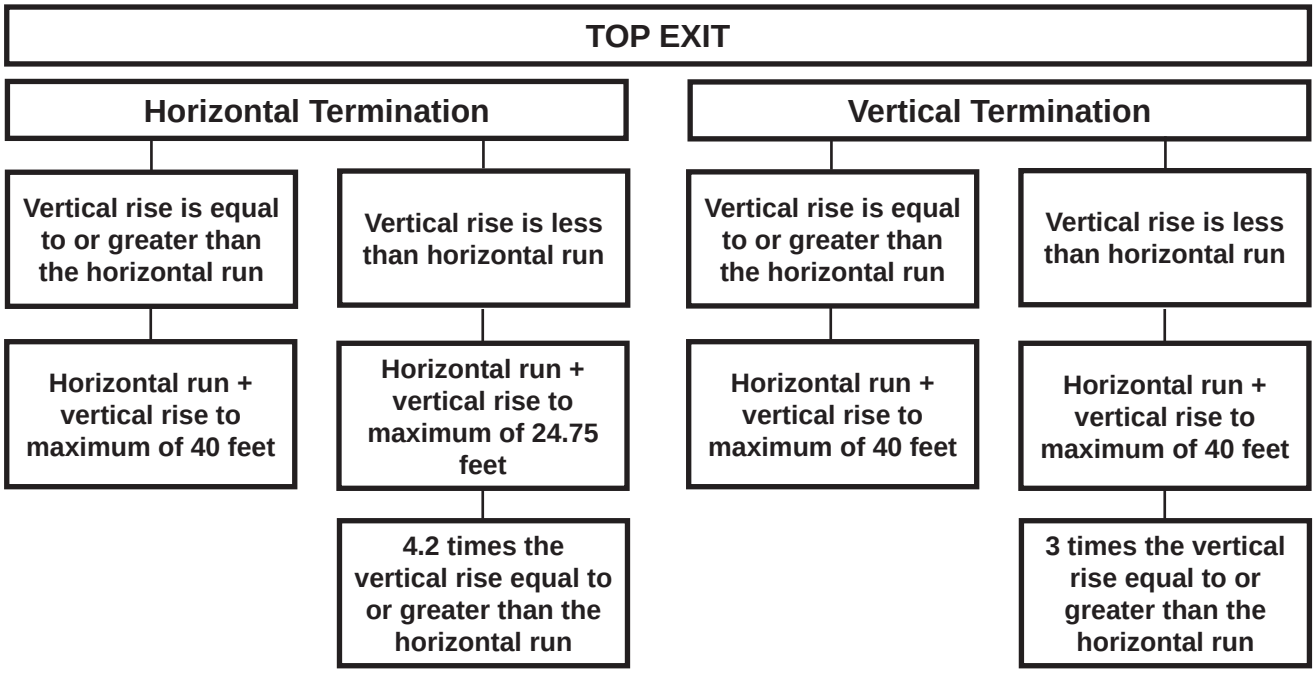

13.1

3.6 DEFINITIONS

For the following symbols used in the venting calculations and examples are:
> - greater than
≥ - equal to or greater than
< - less than
≤ - equal to or less than
H_T - total of both horizontal vent lengths (Hr) and offsets (Ho) in feet
H_R - combined horizontal vent lengths in feet
H_O - offset factor: .03 (total degrees of offset - 90°*) in feet
V_T - combined vertical vent lengths in feet

14.1

3.7 ELBOW VENT LENGTH VALUES

	FEET	INCHES
1°	0.03	0.5
15°	0.45	6.0
30°	0.9	11.0
45°	1.35	16.0
90°*	2.7	32.0

* The first 90° offset has a zero value and is shown in the formula as - 90°

15.1

3.8 HORIZONTAL TERMINATION

$(H_T) \leq (V_T)$

Simple venting configuration (only one 90° elbow)

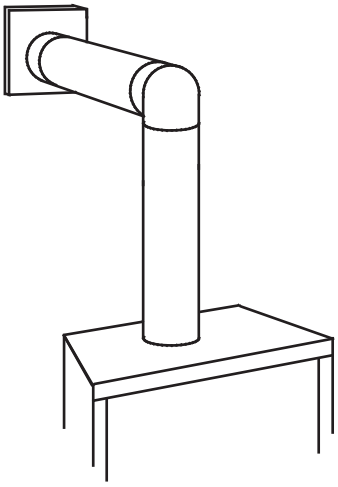

See graph to determine the required vertical rise V_T for the required horizontal run H_T.

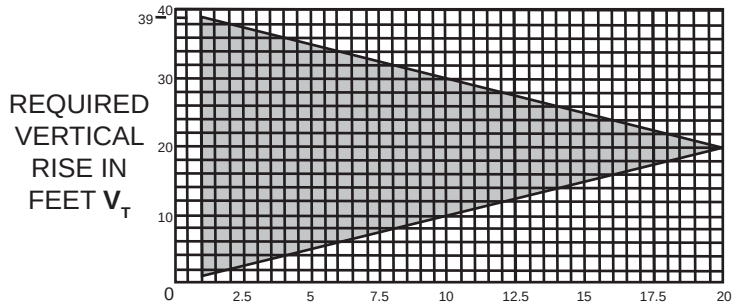

The shaded area within the lines represents acceptable values for H_T and V_T

For vent configurations requiring more than one 90° elbow, the following formulas apply:

Formula 1: $H_T \leq V_T$

Formula 2: $H_T + V_T \leq 40$ feet

Example:

V_1 = 3 FT

V_2 = 8 FT

$V_T = V_1 + V_2$ = 3 FT + 8 FT = 11 FT

H_1 = 2.5 FT

H_2 = 2 FT

$H_R = H_1 + H_2$ = 2.5 + 2 = 4.5 FT

H_O = .03 (three 90° elbows - 90°) = .03 (270° - 90°) = 5.4 FT

$H_T = H_R + H_O$ = 4.5 + 5.4 = 9.9 FT

$H_T + V_T$ = 9.9 + 11 = 20.9 FT

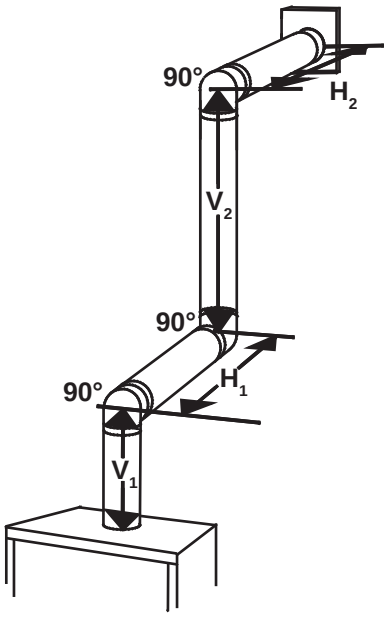

Formula 1: $H_T \leq V_T$

9.9 ≤ 11

Formula 2: $H_T + V_T \leq 40$ **FT**

20.9 ≤ 40

Since both formulas are met, this vent configuration is acceptable.

16.1A

$(H_T) > (V_T)$

Simple venting configuration (only one 90° elbow)

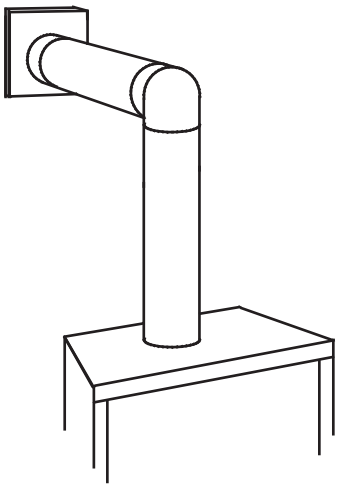

See graph to determine the required vertical rise $\mathbf{V_T}$ for the required horizontal run $\mathbf{H_T}$.

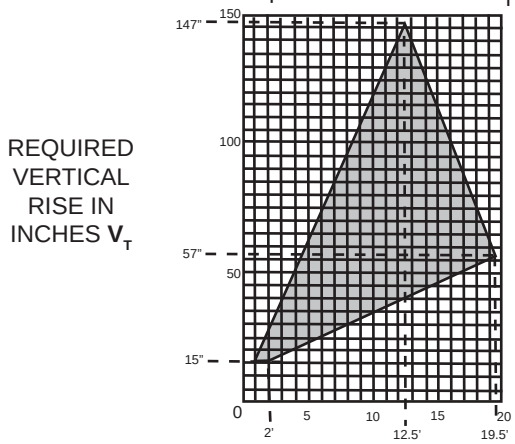

HORIZONTAL VENT RUN PLUS OFFSET IN FEET $\mathbf{H_T}$

The shaded area within the lines represents acceptable values for $\mathbf{H_T}$ and $\mathbf{V_T}$

For vent configurations requiring more than one 90° elbow, the following formulas apply:

Formula 1: $H_T \leq 4.2\ V_T$
Formula 2: $H_T + V_T \leq 24.75$ feet

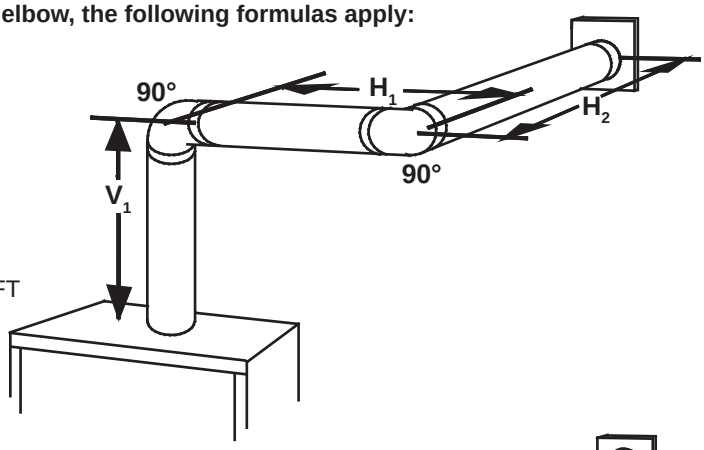

Example:
$V_1 = V_T = 6$ FT
$H_1 = 3$ FT
$H_2 = 5$ FT
$H_R = H_1 + H_2 = 3 + 5 = 8$ FT
$H_O = .03$ (two 90° elbows - 90°) = .03 (180° - 90°) = 2.7 FT
$H_T = H_R + H_O = 8 + 2.7 = 10.7$ FT
$H_T + V_T = 10.7 + 6 = 16.7$ FT

Formula 1: $H_T \leq 4.2\ V_T$
$4.2\ V_T = 4.2 \times 6 = 25.2$ FT
$10.7 \leq 25.2$

Formula 2: $H_T + V_T \leq 24.75$ FT
$16.7 \leq 24.75$

Since both formulas are met, this vent configuration is acceptable.

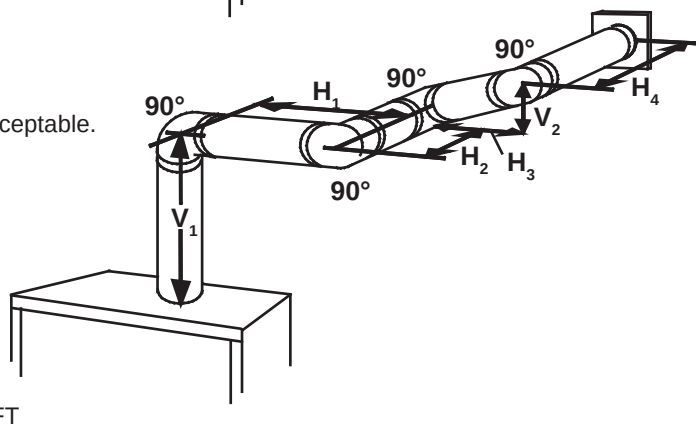

Example:
$V_1 = 4$ FT
$V_2 = 1.5$ FT
$V_T = V_1 + V_2 = 4 + 1.5 = 5.5$ FT
$H_1 = 2$ FT
$H_2 = 1$ FT
$H_3 = 1$ FT
$H_4 = 1.5$ FT
$H_R = H_1 + H_2 + H_3 + H_4 = 2 + 1 + 1 + 1.5 = 5.5$ FT
$H_O = .03$ (four 90° elbows - 90°) = .03 (360° - 90°) = 8.1 FT
$H_T = H_R + H_O = 5.5 + 8.1 = 13.6$ FT
$H_T + V_T = 13.6 + 5.5 = 19.1$ FT

Formula 1: $H_T \leq 4.2\ V_T$
$4.2\ V_T = 4.2 \times 5.5 = 23.1$ FT
$13.6 \leq 23.1$

Formula 2: $H_T + V_T \leq 24.75$ FT
$19.1 \leq 24.75$

Since both formulas are met, this vent configuration is acceptable.

3.9 VERTICAL TERMINATION

$(H_T) \leq (V_T)$

Simple venting configurations.

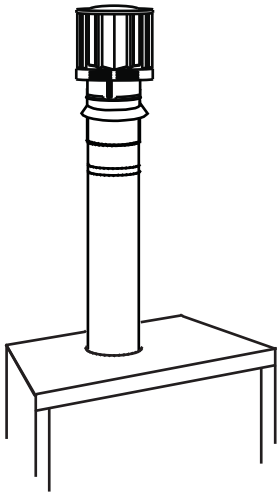

See graph to determine the required vertical rise $\mathbf{V_T}$ for the required horizontal run $\mathbf{H_T}$.

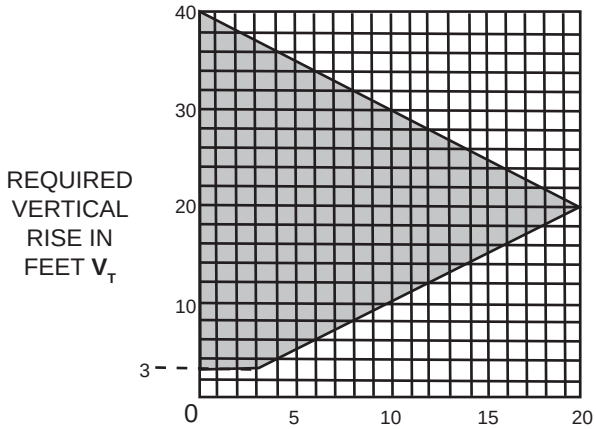

HORIZONTAL VENT RUN PLUS OFFSET IN FEET $\mathbf{H_T}$

The shaded area within the lines represents acceptable values for $\mathbf{H_T}$ and $\mathbf{V_T}$

For vent configurations requiring one or more 90° elbows the following formulas apply:

Formula 1: $\mathbf{H_T \leq V_T}$
Formula 2: $\mathbf{H_T + V_T \leq 40}$ **feet**

Example:
$\mathbf{V_1}$ = 5 FT
$\mathbf{V_2}$ = 6 FT
$\mathbf{V_3}$ = 10 FT
$\mathbf{V_T} = \mathbf{V_1 + V_2 + V_3} = 5 + 6 + 10 = 21$ FT
$\mathbf{H_1}$ = 8 FT
$\mathbf{H_2}$ = 2.5 FT
$\mathbf{H_R} = \mathbf{H_1 + H_2} = 8 + 2.5 = 10.5$ FT
$\mathbf{H_O}$ = .03 (four 90° elbows - 90°)
= .03 (360° - 90°) = 8.1 FT
$\mathbf{H_T} = \mathbf{H_R + H_O} = 10.5 + 8.1 = 18.6$ FT
$\mathbf{H_T + V_T} = 18.6 + 21 = 39.6$ FT

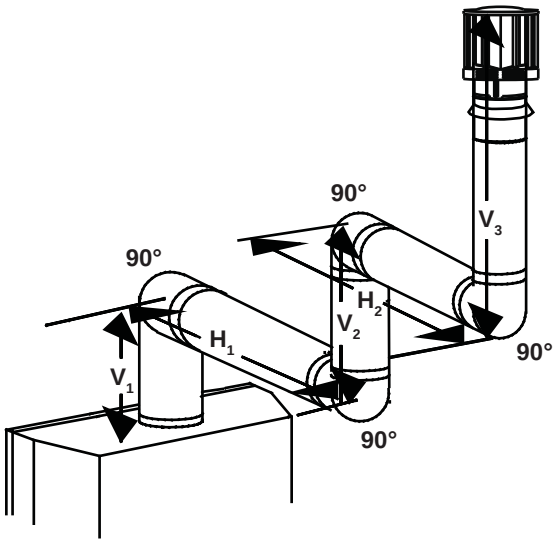

Formula 1: $\mathbf{H_T \leq V_T}$
$18.6 \leq 21$
Formula 2: $\mathbf{H_T + V_T \leq 40}$ **FT**
$39.6 \leq 40$

Since both formulas are met, this vent configuration is acceptable.

18.1

$(H_T) > (V_T)$

Simple venting configurations.

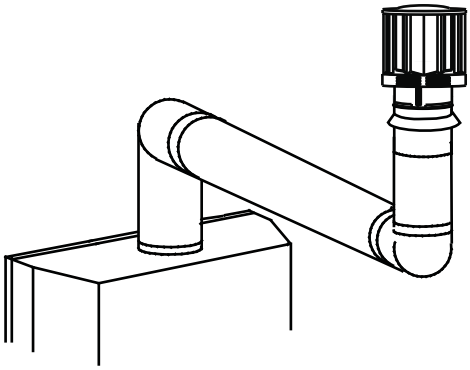

See graph to determine the required vertical rise $\mathbf{V_T}$ for the required horizontal run $\mathbf{H_T}$.

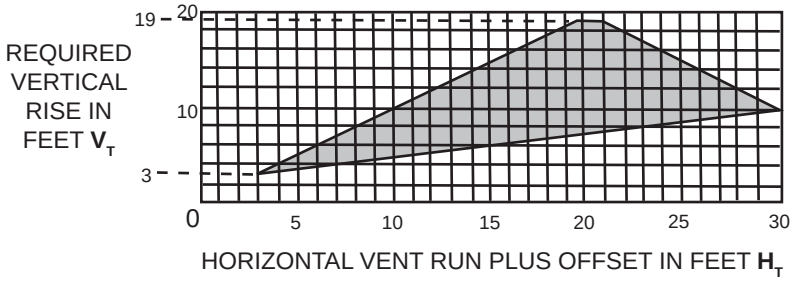

The shaded area within the lines represents acceptable values for $\mathbf{H_T}$ and $\mathbf{V_T}$

For vent configurations requiring more than two 90° elbows the following formulas apply:

Formula 1: $\mathbf{H_T \leq 3V_T}$
Formula 2: $\mathbf{H_T + V_T \leq 40}$ **feet**

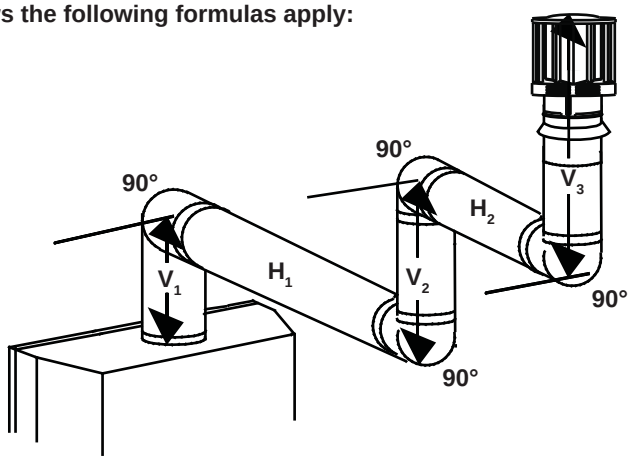

Example:
$\mathbf{V_1}$ = 2 FT
$\mathbf{V_2}$ = 1 FT
$\mathbf{V_3}$ = 1.5 FT
$\mathbf{V_T} = \mathbf{V_1 + V_2 + V_3}$ = 2 + 1 + 1.5 = 4.5 FT
$\mathbf{H_1}$ = 6 FT
$\mathbf{H_2}$ = 2 FT
$\mathbf{H_R} = \mathbf{H_1 + H_2}$ = 6 + 2 = 8 FT
$\mathbf{H_O}$ = .03 (four 90° elbows - 90°)
= .03 (360° - 90°) = 8.1 FT
$\mathbf{H_T} = \mathbf{H_R + H_O}$ = 8 + 8.1 = 16.1 FT
$\mathbf{H_T + V_T}$ = 16.1 + 4.5 = 20.6 FT

Formula 1: $\mathbf{H_T \leq 3V_T}$
$\mathbf{3V_T}$ = 3 x 4.5 = 13.5 FT
16.1 > 13.5

Since this formula is not met, this vent configuration is **<u>un</u>acceptable.**

Formula 2: $\mathbf{H_T + V_T \leq 40}$ **feet**
20.6 ≤ 40

Since only formula 2 is met, this vent configuration is unacceptable and a new appliance location or vent configuration will need to be established to satisfy both formulas.

18.1_2A

4.0 INSTALLATION

⚠ WARNING

FOR SAFE AND PROPER OPERATION OF THE APPLIANCE, FOLLOW THE VENTING INSTRUCTIONS EXACTLY.

ALL INNER EXHAUST AND OUTER INTAKE VENT PIPE JOINTS MAY BE SEALED USING EITHER RED RTV HIGH TEMP SILICONE SEALANT W573-0002 (NOT SUPPLIED) OR BLACK HIGH TEMP MILL PAC W573-0007 (NOT SUPPLIED) WITH THE EXCEPTION OF THE APPLIANCE EXHAUST FLUE COLLAR WHICH MUST BE SEALED USING MILL PAC.

IF USING PIPE CLAMPS TO CONNECT VENT COMPONENTS, 3 SCREWS MUST ALSO BE USED TO ENSURE THE CONNECTION CANNOT SLIP OFF.

DO NOT CLAMP THE FLEXIBLE VENT PIPE.

RISK OF FIRE, EXPLOSION OR ASPHYXIATION. IMPROPER SUPPORT OF THE ENTIRE VENTING SYSTEM MAY ALLOW VENT TO SAG AND SEPARATE. USE VENT RUN SUPPORTS AND CONNECT VENT SECTIONS PER INSTALLATION INSTRUCTIONS.

RISK OF FIRE, DO NOT ALLOW LOOSE MATERIALS OR INSULATION TO TOUCH THE VENT PIPE. REMOVE INSULATION TO ALLOW FOR THE INSTALLATION OF THE ATTIC SHIELD AND TO MAINTAIN CLEARANCES TO COMBUSTIBLES.

68.2A

4.1 WALL AND CEILING PROTECTION

⚠ WARNING

DO NOT FILL THE SPACE BETWEEN THE VENT PIPE AND ENCLOSURE WITH ANY TYPE OF MATERIAL. DO NOT PACK INSULATION OR COMBUSTIBLES BETWEEN CEILING FIRESTOPS. ALWAYS MAINTAIN SPECIFIED CLEARANCES AROUND VENTING AND FIRESTOP SYSTEMS. INSTALL WALL SHIELDS AND FIRESTOPS AS SPECIFIED. FAILURE TO KEEP INSULATION OR OTHER MATERIALS AWAY FROM VENT PIPE MAY CAUSE FIRE.

70.1

For optimum performance it is recommended that all horizontal runs have a minimum of 1/4” rise per foot using flexible venting. For safe and proper operation of the appliance, follow the venting instructions exactly.

4.1.1 HORIZONTAL INSTALLATION

⚠ WARNING

THE FIRESTOP ASSEMBLY MUST BE INSTALLED WITH THE VENT SHIELD TO THE TOP.

TERMINALS MUST NOT BE RECESSED INTO A WALL OR SIDING MORE THAN THE DEPTH OF THE RETURN FLANGE OF THE MOUNTING PLATE.

This application occurs when venting through an exterior wall. Having determined the correct height for the air terminal location, cut and frame a hole in the exterior wall as illustrated to accommodate the firestop assembly. Dry fit the firestop assembly before proceeding to ensure the brackets on the rear surface fit to the inside surface of the horizontal framing.

The length of the vent shield may be cut shorter for combustible walls that are less than 8 1/2” thick but the vent shield must extend the full depth of the combustible wall.

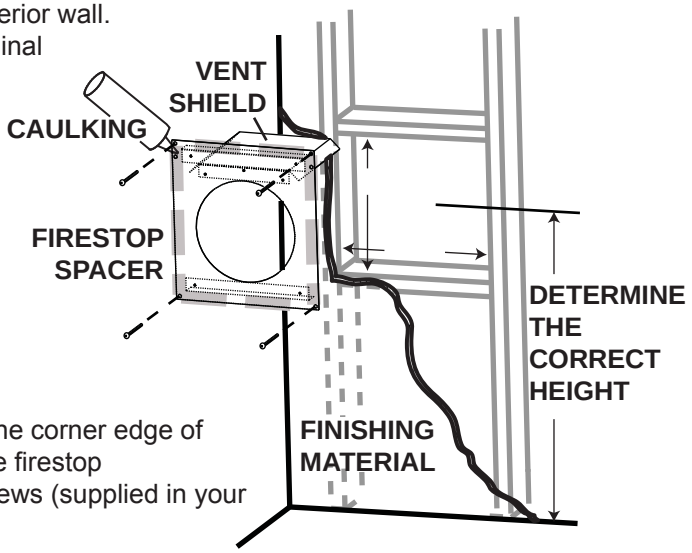

A. Apply a bead of caulking (not supplied) around the corner edge of the inside surface of the firestop assembly, fit the firestop assembly to the hole and secure using the 4 screws (supplied in your manual baggie).

B. Once the vent pipe is installed in its final position, apply high temperature sealant W573-0007 (not supplied) between the pipe and the firestop.

20.2

4.1.2 VERTICAL INSTALLATION

This application occurs when venting through a roof. Installation kits for various roof pitches are available from your authorized dealer / distributor. See accessories to order specific kits required.

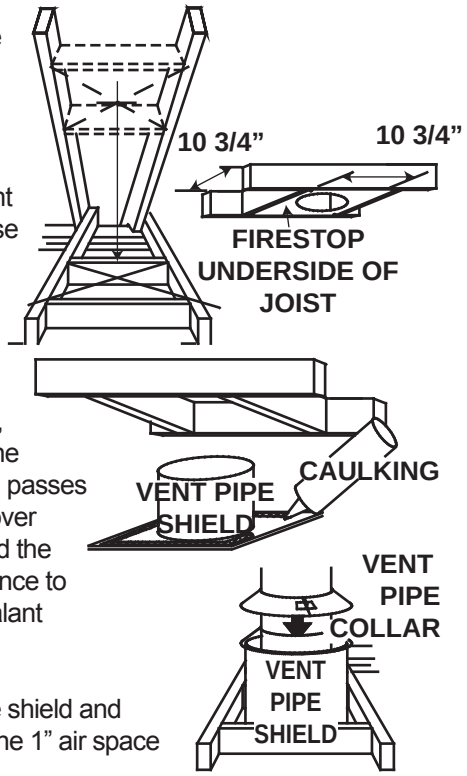

A. Determine the air terminal location, cut and frame a square opening as illustrated in the ceiling and the roof to provide the minimum 1“ clearance between the vent pipe and any combustible material. Try to center the vent pipe location midway between two joists to prevent having to cut them. Use a plumb bob to line up the center of the openings. A vent pipe shield will prevent any materials such as insulation, from filling up the 1” air space around the pipe. Nail headers between the joist for extra support.

B. Apply a bead of caulking (not supplied) to the framework or to the Wolf Steel vent pipe shield plate or equivalent (in the case of a finished ceiling), and secure over the opening in the ceiling. A firestop must be placed on the bottom of each framed opening in a roof or ceiling that the venting system passes through. Apply a bead of caulking all around and place a firestop spacer over the vent shield to restrict cold air from being drawn into the room or around the fireplace. Ensure that both spacer and shield maintain the required clearance to combustibles. Once the vent pipe is installed in its final position, apply sealant between the pipe and the firestop assembly.

C. In the attic, slide the vent pipe collar down to cover up the open end of the shield and tighten. This will prevent any materials, such as insulation, from filling up the 1” air space around the pipe.

21.1

4.2 USING FLEXIBLE VENT COMPONENTS

⚠ WARNING

DO NOT ALLOW THE INNER FLEX PIPE TO BUNCH UP ON HORIZONTAL OR VERTICAL RUNS AND ELBOWS. KEEP IT PULLED TIGHT.

SPACERS ARE ATTACHED TO THE INNER FLEX PIPE AT PREDETERMINED INTERVALS TO MAINTAIN AN EVEN AIR GAP TO THE OUTER FLEX PIPE. THIS GAP IS REQUIRED FOR SAFE OPERATION. A SPACER IS REQUIRED AT THE START, MIDDLE AND END OF EACH ELBOW TO ENSURE THIS GAP IS MAINTAINED. THESE SPACERS MUST NOT BE REMOVED.

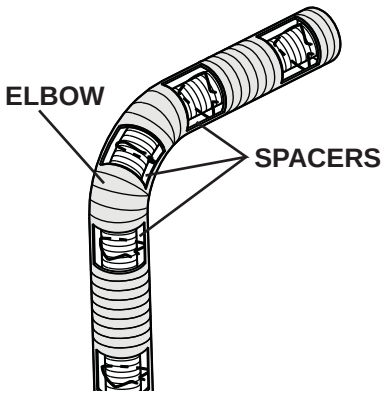

For safe and proper operation of the appliance, follow the venting instructions exactly.
All inner flex pipe and outer flex pipe joints may be sealed using high temperature sealant W573-0002 (not supplied) or the high temperature sealant W573-0007 Mill Pac (not supplied). However, the high temperature sealant W573-0007 Mill Pac (not supplied) must be used on the joint connecting the inner flex pipe and the exhaust flue collar.
Use only approved flexible vent pipe kits marked:

"Wolf Steel Approved Venting" as identified by the stamp only on the outer flex pipe.

22.1

4.2.1 HORIZONTAL AIR TERMINAL INSTALLATION

A. Stretch the inner flex pipe to the required length needed for the finished wall surface. Apply a heavy bead of high temperature sealant W573-0007 Mill Pac (not supplied) to the inner sleeve of the air terminal. Slip the vent pipe a minimum of 2" over the inner sleeve of the air terminal and secure with 3 #8 screws.

B. Using the outer flex pipe, slide over the outer combustion air sleeve of the air terminal and secure with 3 #8 screws. Seal using high temperature sealant W573-0002 (not supplied).

C. Insert the vent pipes through the firestop maintaining the required clearance to combustibles. Holding the air terminal (lettering in an upright, readable position), secure to the exterior wall and make weather tight by sealing with caulking (not supplied).

D. If more vent pipe needs to be used to reach the fireplace, couple them together as illustrated. The vent system must be supported approximately every 3 feet for both vertical and horizontal runs. Use noncombustible strapping to maintain the minimum 1" clearance to combustibles.

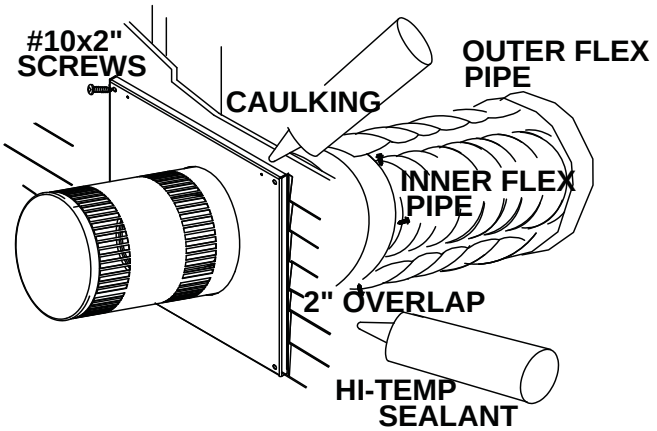

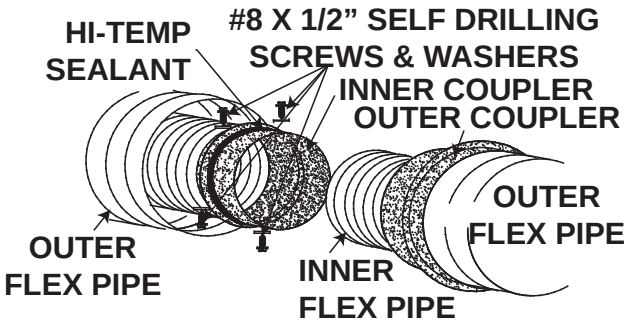

The air terminal mounting plate may be recessed into the exterior wall or siding no greater than the depth of its return flange.

23.3A

4.2.2 VERTICAL AIR TERMINAL INSTALLATION

⚠ WARNING

MAINTAIN A MINIMUM 2” SPACE BETWEEN THE AIR INLET BASE AND THE STORM COLLAR.

A. Fasten the roof support to the roof using the screws provided. The roof support is optional. In this case the venting is to be adequately supported using either an alternate method suitable to the authority having jurisdiction or the optional roof support.

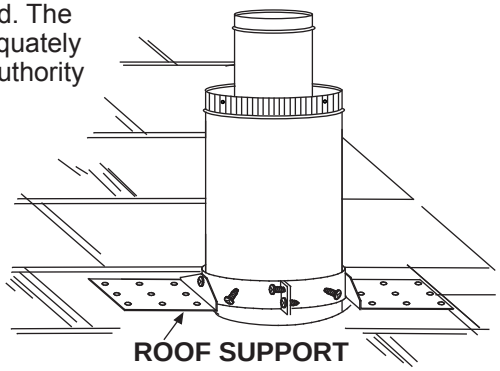

B. Stretch the inner flex pipe to the required length. Slip the inner flex pipe a minimum of 2” over the inner pipe of the air terminal connector and secure with 3 #8 screws. Seal using a heavy bead of high temperature sealant W573-0007 (not supplied).

C. Repeat using the outer flex pipe, using a heavy bead of high temperature sealant W573-0002 (not supplied).

D. Thread the air terminal connector / vent pipe assembly down through the roof. The air terminal must be positioned vertically and plumb. Attach the air terminal connector to the roof support, ensuring that the top of the air terminal is 16” above the highest point that it penetrates the roof.

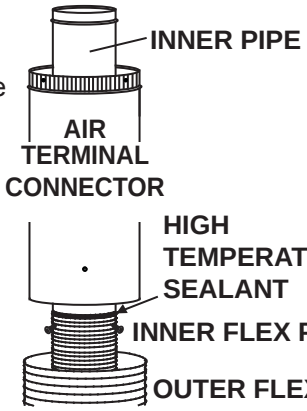

E. Remove nails from the shingles, above and to the sides of the air terminal connector. Place the flashing over the air terminal connector leaving a min. 3/4” of the air terminal connector showing above the top of the flashing. Slide the flashing underneath the sides and upper edge of the shingles. Ensure that the air terminal connector is properly centred within the flashing, giving a 3/4” margin all around. Fasten to the roof. Do not nail through the lower portion of the flashing. Make weather-tight by sealing with caulking. Where possible, cover the sides and top edges of the flashing with roofing material.

F. Aligning the seams of the terminal and air terminal connector, place the terminal over the air terminal connector making sure the vent pipe goes into the hole in the terminal. Secure with the three screws provided.

G. Apply a heavy bead of weatherproof caulking 2” above the flashing. Install the storm collar around the air terminal and slide down to the caulking. Tighten to ensure that a weather-tight seal between the air terminal and the collar is achieved.

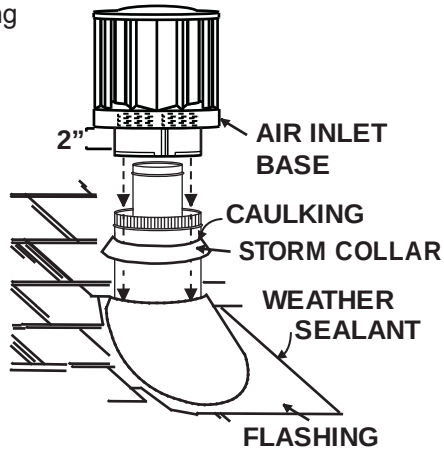

H. If more vent pipe needs to be used to reach the appliance see “HORIZONTAL AIR TERMINAL INSTALLATION” section.

24.1

4.2.3 APPLIANCE VENT CONNECTION

A. Install the inner flex pipe to the appliance. Secure with 3 screws and flat washers. Seal the joint and screw holes using the high temperature sealant W573-0007 (not supplied).

B. Install the outer flex pipe to the appliance. Attach and seal the joints using the high temperature sealant W573-0002 (not supplied).

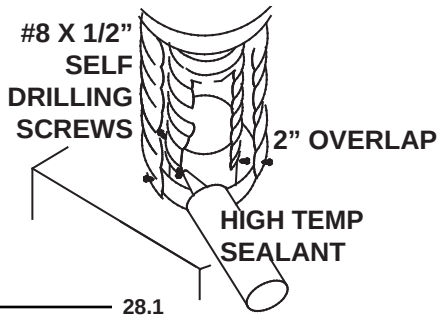

28.1

4.3 MOBILE HOME INSTALLATION

This appliance is certified to be installed as an OEM (Original Equipment Manufacturer) installation in a manufactured home or mobile home and must be installed in accordance with the manufacturer’s instructions and the Manufactured Home Construction and Safety Standard, Title 24 CFR, Part 3280, in the United States or the Mobile Home Standard, CAN/CSA Z240 MH Series, in Canada. This appliance is only for use with the type(s) of gas indicated on the rating plate. A conversion kit is supplied with the mobile home appliance.

This Mobile/Manufactured Home Listed appliance comes factory equipped with a means to secure the unit. Built in appliances are equipped with 1/4” diameter holes located in the front left and right corners of the base. Use #10 hex head screws, inserted through the holes in the base to secure. For free standing products contact your local authorized dealer / distributor for the appropriate securing kit. For mobile home installations, the appliance must be fastened in place. It is recommended that the appliance be secured in all installations. Always turn off the pilot and the fuel supply at the source, prior to moving the mobile home. After moving the mobile home and prior to lighting the appliance, ensure that the logs are positioned correctly.

This appliance is certified to be installed in an aftermarket permanently located, manufactured (mobile) home, where not prohibited by local codes.
This appliance is only for use with the type of gas indicated on the rating plate. This appliance is not convertible for use with other gases, unless a certified kit is used.

Conversion Kits
This appliance is field convertible between Natural Gas (NG) and Propane (LP).
To convert from one gas to another consult your Authorized dealer/distributor.

29.1

4.4 GAS INSTALLATION

⚠ WARNING
RISK OF FIRE, EXPLOSION OR ASPHYXIATION. ENSURE THERE ARE NO IGNITION SOURCES SUCH AS SPARKS OR OPEN FLAMES.
SUPPORT GAS CONTROL WHEN ATTACHING GAS SUPPLY PIPE TO PREVENT DAMAGING GAS LINE.
ALWAYS LIGHT THE PILOT WHETHER FOR THE FIRST TIME OR IF THE GAS SUPPLY HAS RUN OUT WITH THE GLASS DOOR OPENED OR REMOVED. PURGING OF THE GAS SUPPLY LINE SHOULD BE PERFORMED BY A QUALIFIED SERVICE TECHNICIAN. ASSURE THAT A CONTINUOUS GAS FLOW IS AT THE BURNER BEFORE CLOSING THE DOOR. ENSURE ADEQUATE VENTILATION. FOR GAS AND ELECTRICAL LOCATIONS, SEE "DIMENSION" SECTION.
ALL GAS CONNECTIONS MUST BE CONTAINED WITHIN THE APPLIANCE WHEN COMPLETE.
HIGH PRESSURE WILL DAMAGE VALVE. DISCONNECT GAS SUPPLY PIPING BEFORE TESTING GAS LINE AT TEST PRESSURES ABOVE 1/2 PSIG.
VALVE SETTINGS HAVE BEEN FACTORY SET, DO NOT CHANGE.

Installation and servicing to be done by a qualified installer.

A. Move the appliance into position and secure.

B. If equipped with a flex connector the appliance is designed to accept a 1/2" gas supply. Without the connector it is designed to accept a 3/8" gas supply. The appliance is equipped with a manual shut off valve to turn off the gas supply to the appliance.

C. Connect the gas supply in accordance to local codes. In the absence of local codes, install to the current CAN/CSA-B149.1 Installation Code in Canada or to the current National Fuel Gas Code, ANSI Z223.1 / NFPA 54 in the United States.

D. When flexing any gas line, support the gas valve so that the lines are not bent or kinked.

E. The gas line flex-connector should be installed to provide sufficient movement for shifting the burner assembly on it's side to aid with servicing components.

F. Check for gas leaks by brushing on a soap and water solution. **Do not use open flame.**

30.1A

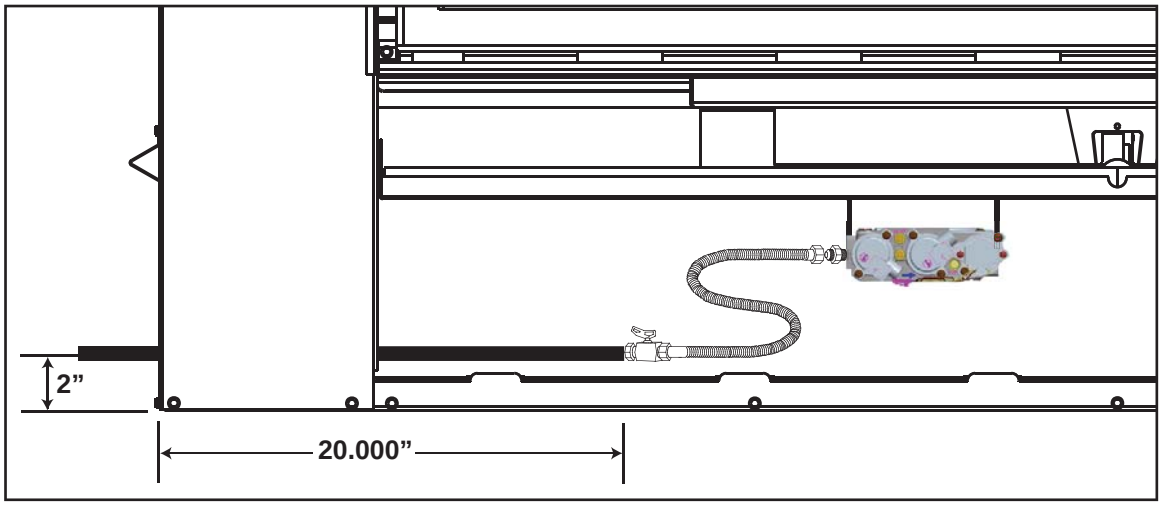

<u>NOTE:</u> Connect the gas supply to the 1/2" shut off and flex connector (supplied). Ensure gas supply is secured.

5.0 FRAMING

⚠ WARNING

RISK OF FIRE!

IN ORDER TO AVOID THE POSSIBILITY OF EXPOSED INSULATION OR VAPOUR BARRIER COMING IN CONTACT WITH THE APPLIANCE BODY, IT IS RECOMMENDED THAT THE WALLS OF THE APPLIANCE ENCLOSURE BE "FINISHED" (IE: DRYWALL / SHEETROCK), AS YOU WOULD FINISH ANY OTHER OUTSIDE WALL OF A HOME. THIS WILL ENSURE THAT CLEARANCE TO COMBUSTIBLES IS MAINTAINED WITHIN THE CAVITY.

DO NOT NOTCH THE FRAMING AROUND THE APPLIANCE STAND-OFFS. FAILURE TO MAINTAIN AIR SPACE CLEARANCE MAY CAUSE OVER HEATING AND FIRE. PREVENT CONTACT WITH SAGGING OR LOOSE INSULATION OR FRAMING AND OTHER COMBUSTIBLE MATERIALS. BLOCK OPENING INTO THE CHASE TO PREVENT ENTRY OF BLOWN-IN INSULATION. MAKE SURE INSULATION AND OTHER MATERIALS ARE SECURED.

WHEN CONSTRUCTING THE ENCLOSURE ALLOW FOR FINISHING MATERIAL THICKNESS TO MAINTAIN CLEARANCES. FRAMING OR FINISHING MATERIAL CLOSER THAN THE MINIMUMS LISTED MUST BE CONSTRUCTED ENTIRELY OF NON-COMBUSTIBLE MATERIALS. MATERIALS CONSISTING ENTIRELY OF STEEL, IRON, BRICK, TILE, CONCRETE, SLATE, GLASS OR PLASTERS, OR ANY COMBINATION THEREOF ARE SUITABLE. MATERIALS THAT ARE REPORTED AS PASSING ASTM E 136, STANDARD TEST METHOD FOR BEHAVIOUR OF MATERIALS IN A VERTICAL TUBE FURNACE AT 750°C AND UL763 SHALL BE CONSIDERED NON-COMBUSTIBLE MATERIALS.

MINIMUM CLEARANCE TO COMBUSTIBLES MUST BE MAINTAINED OR A SERIOUS FIRE HAZARD COULD RESULT.

THE APPLIANCE REQUIRES A MINIMUM ENCLOSURE HEIGHT. MEASURE FROM THE APPLIANCE BASE.

IF STEEL STUD FRAMING KITS WITH CEMENT BOARD ARE PROVIDED, THEY MUST BE INSTALLED.

71.1

The LHD50SS is installed into a rectangular opening. It is best to frame your appliance after it is positioned and the vent system is installed. Use the steel stud frame provided.

Maintain these minimum clearances to combustibles from appliance and vent surfaces:
Appliance framing:
Use steel stud framing provided.
Non- Combustible Appliance finishing:
Front - 9" to sides of appliance opening
- 32" above appliance opening
Combustible Appliance finishing:
- 60" from bottom of appliance to enclosure top
- 3" to top of vent pipe*
- 2" to sides and bottom of vent pipe*

Non-combustible finishing material (ie. cement board, brick, stone, tile) must be used to finish the front of the appliance.

***HORIZONTAL VENT SECTIONS:** A minimum clearance of 3" to the top and 2" to the sides and bottom of the vent pipe on all horizontal runs to combustibles is required. Horizontal vent sections within enclosures require a minimum clearance of 6" at the top of the vent pipe, see "MINIMUM CLEARANCE TO COMBUSTIBLE ENCLOSURES" section. Use firestop spacer W010-2107 (supplied).

***VERTICAL VENT SECTIONS:** A minimum of 1" all around the vent pipe on all vertical runs to combustibles is required except for clearances in appliance enclosures. Vertical vent sections within enclosures require a minimum clearance of 2" around the vent pipe. Use firestop spacer W500-0028 (not supplied).

5.1 TWO SIDED APPLIANCE

⚠ WARNING

EDGES ARE SHARP, ALWAYS WEAR GLOVES WHEN WORKING WITH SHEET METAL.

A. Lift the frame up and secure with the screws just removed.

B. Erect the steel frame supplied as illustrated and rivet into place.

<u>NOTE:</u> For heavier finishing materials such as marble, we recommend adding extra support to the frame. Rivet metal studs in place. Ensure there is adequate floor support for the appliance and finishing material.

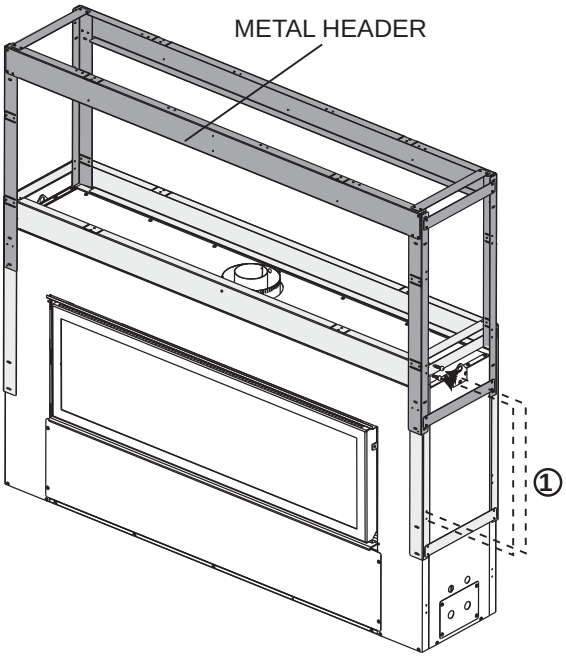

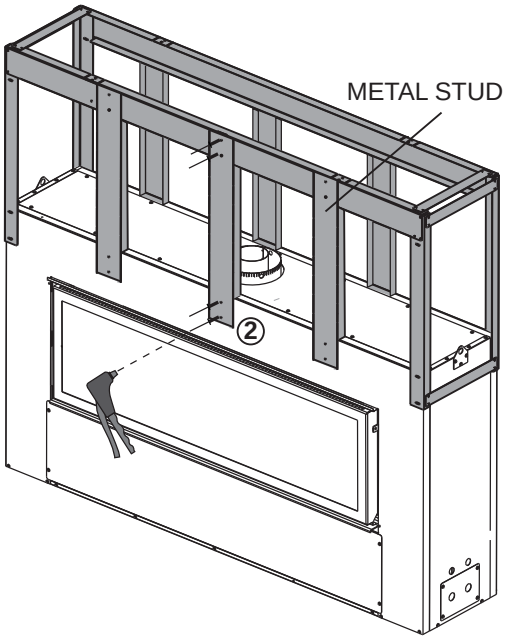

⚠ WARNING

METAL STUDS REQUIRED TO ENSURE CLEARANCE TO COMBUSTIBLES.

IMPORTANT: Before finishing in the appliance test the operation using the remote control, cycling it through all of its different modes, see "OPERATION" section. Should trouble shooting be required, access to the controls can be made through the pre-finishing access panel.

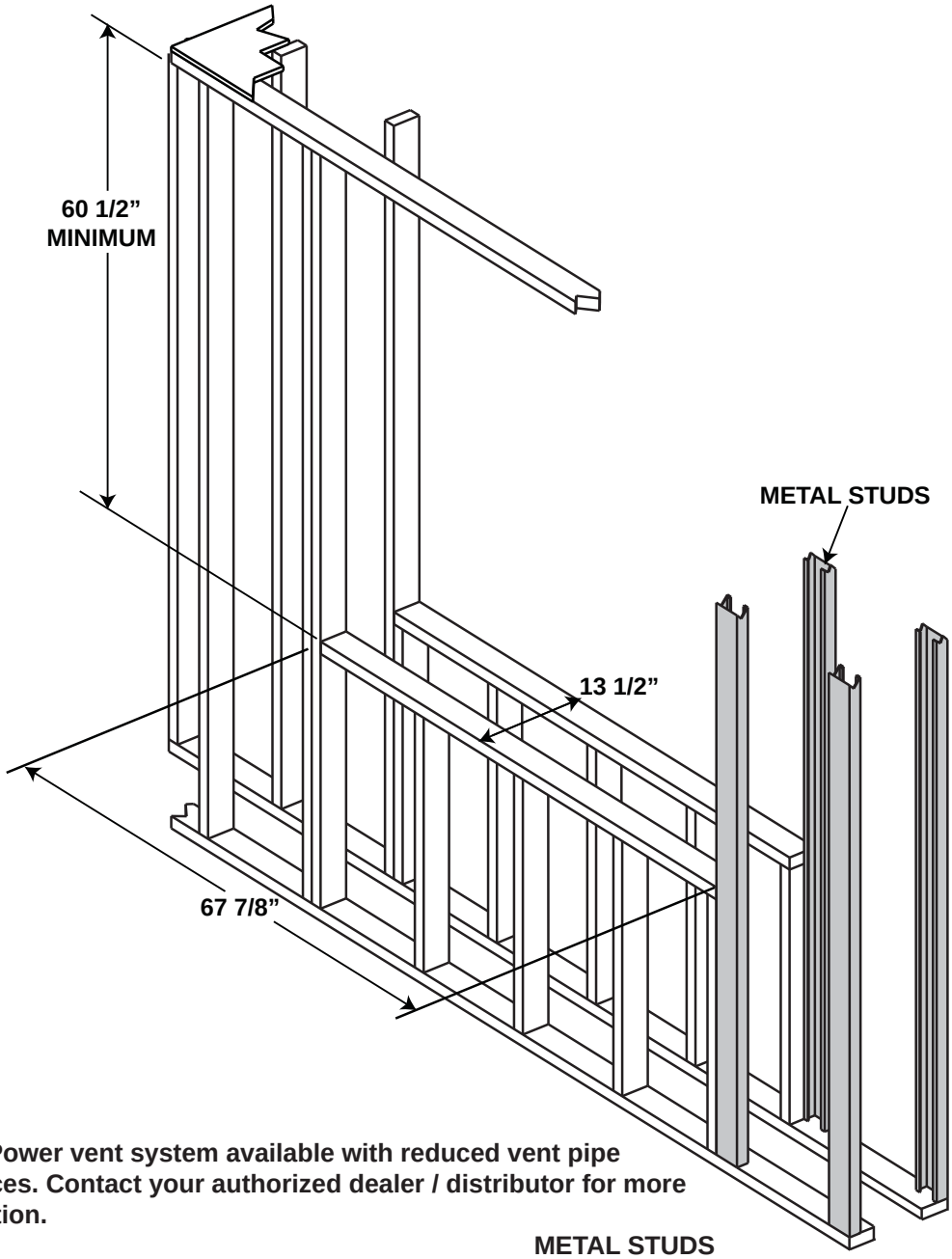

NOTE: Power vent system available with reduced vent pipe clearances. Contact your authorized dealer / distributor for more information.

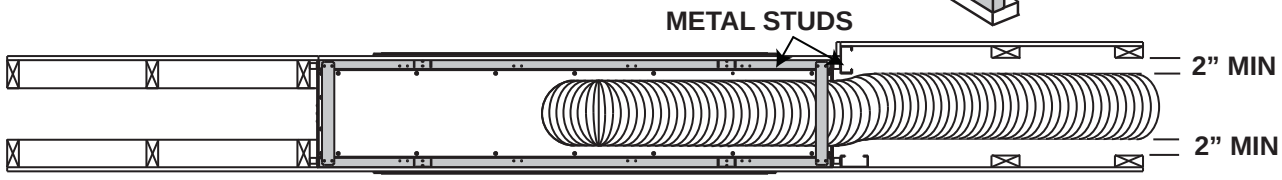

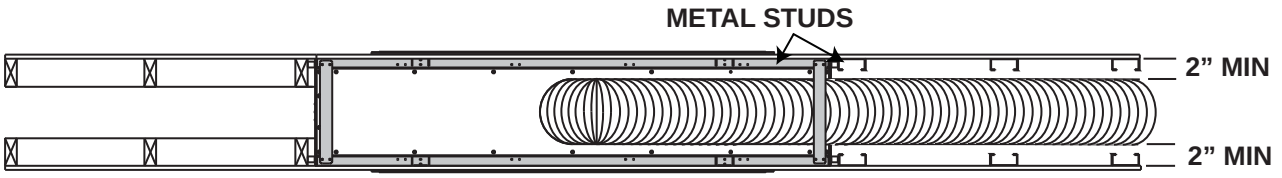

5.2 ONE SIDE APPLIANCE

⚠ WARNING

EDGES ARE SHARP, ALWAYS WEAR GLOVES WHEN WORKING WITH SHEET METAL.

A. Lift the frame up and secure with the screws just removed.

B. Erect the steel frame supplied as illustrated and rivet into place.

<u>NOTE:</u> For heavier finishing materials such as marble, we recommend adding extra support to the frame. Rivet metal studs in place. Ensure there is adequate floor support for the appliance and finishing material.

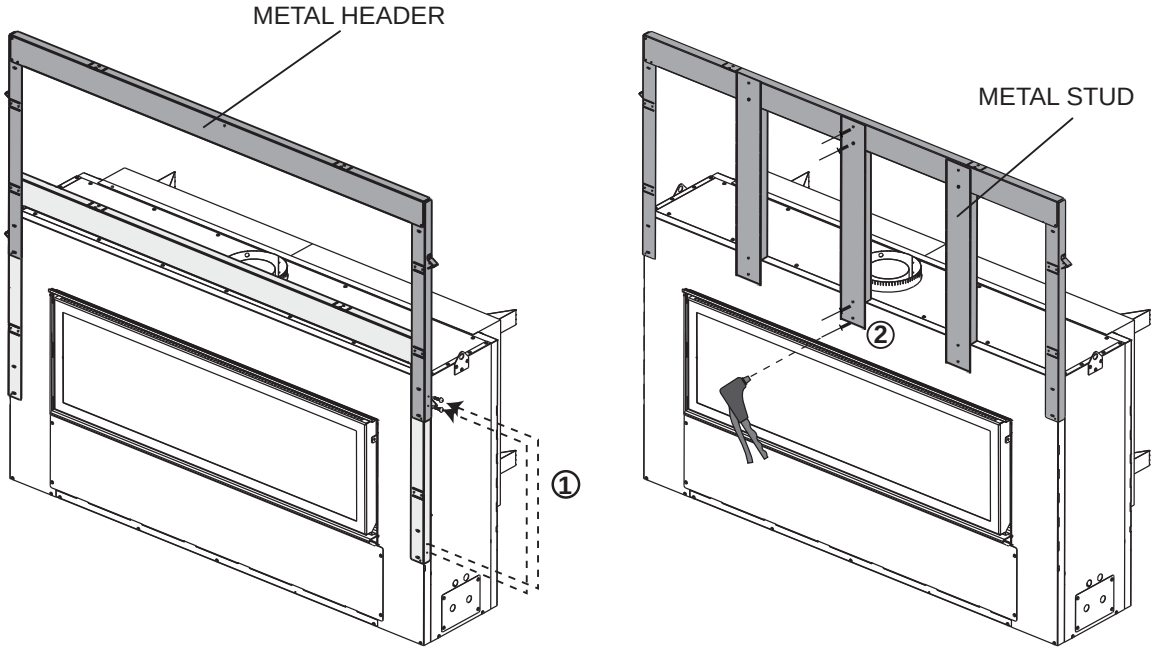

* When constructing the enclosure allow for finishing material thickness to maintain clearances.

<u>IMPORTANT:</u> Before finishing in the appliance test the operation using the remote control, cycling it through all of its different modes, see "OPERATION" section. Should trouble shooting be required, access to the controls can be made through the pre-finishing access panel.

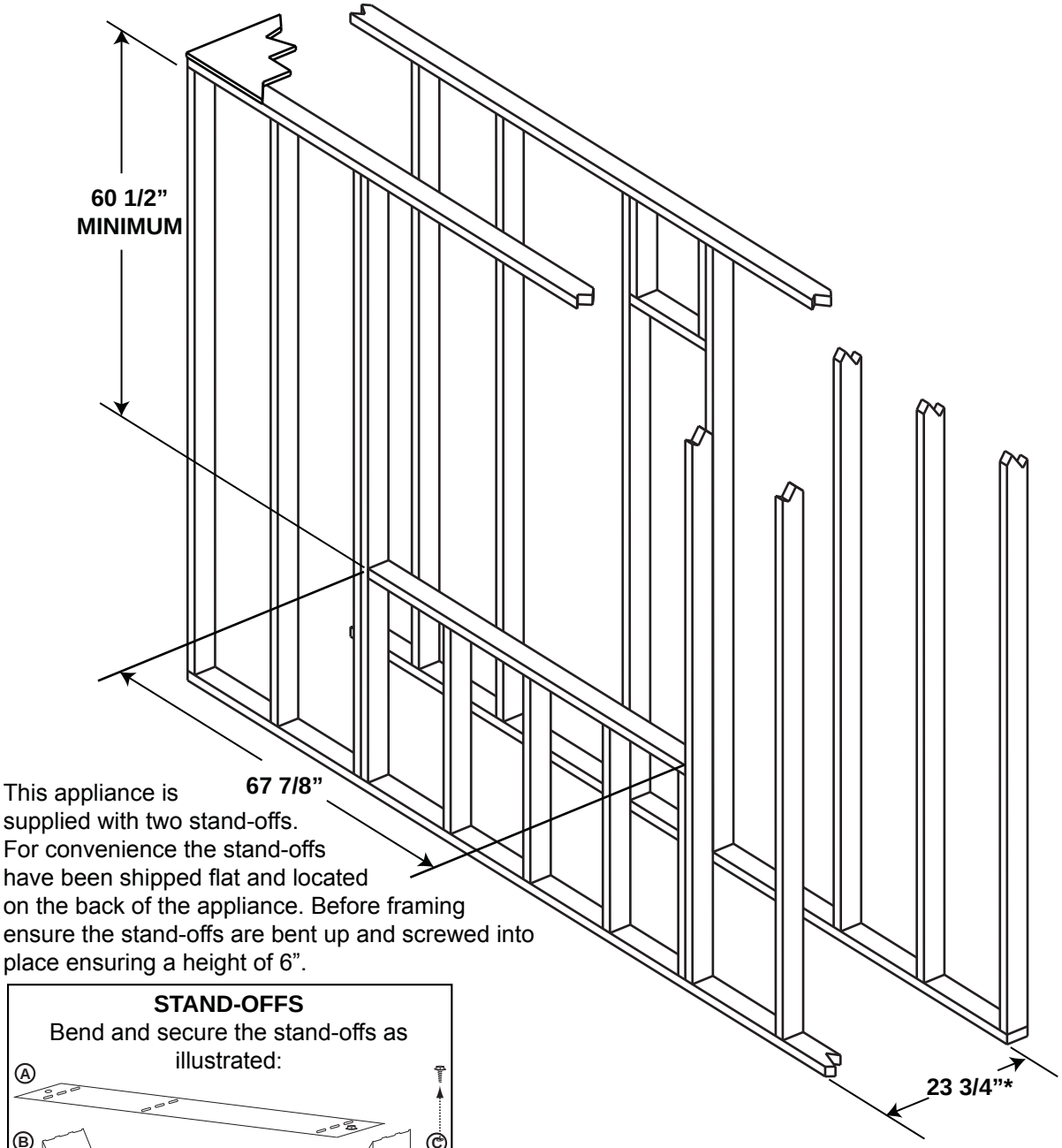

This appliance is supplied with two stand-offs. For convenience the stand-offs have been shipped flat and located on the back of the appliance. Before framing ensure the stand-offs are bent up and screwed into place ensuring a height of 6".

STAND-OFFS

Bend and secure the stand-offs as illustrated:

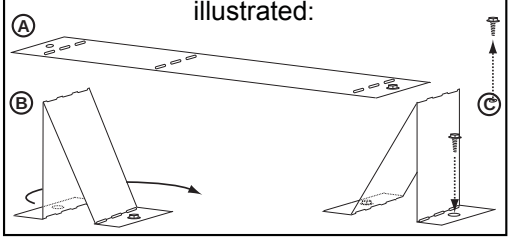

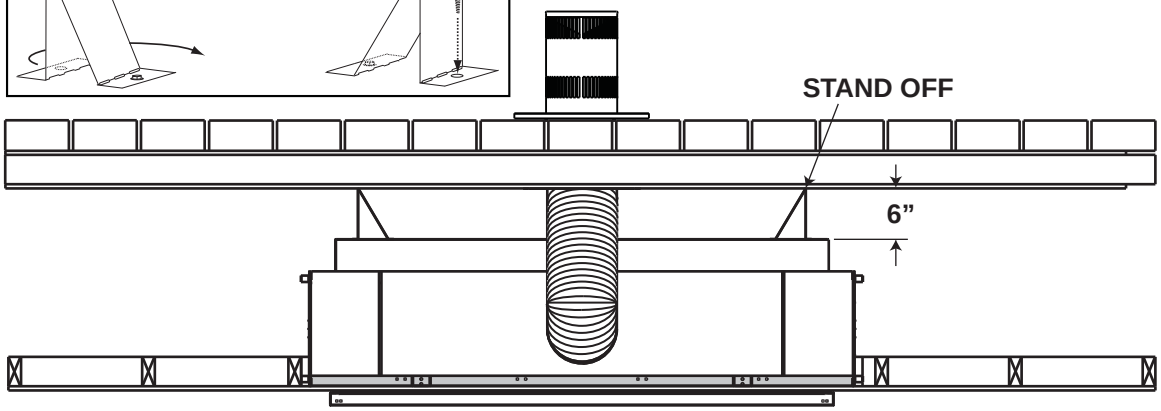

5.3 MINIMUM CLEARANCE TO COMBUSTIBLE ENCLOSURES

⚠ WARNING

THE FRONT OF THE APPLIANCE MUST BE FINISHED WITH ANY NON-COMBUSTIBLE MATERIALS SUCH AS BRICK, MARBLE, GRANITE, ETC., AS LONG AS THESE MATERIALS NEVER OVERHANG INTO THE APPLIANCE OPENING.

IMPORTANT: The LHD50SS requires a minimum inside enclosure height of 60”, measured from the bottom of the appliance. For temperature requirements, this area must be left unobstructed. It is recommended that the enclosure be ventilated at the top and bottom to circulate the hot air.

Before finishing in the appliance test the operation using the remote control, cycling it through all of its different modes, see “OPERATION” section. Check pressure readings, see “PILOT BURNER ADJUSTMENT” section. Once finished in, access to the control components can only be done through the inside of the appliance.

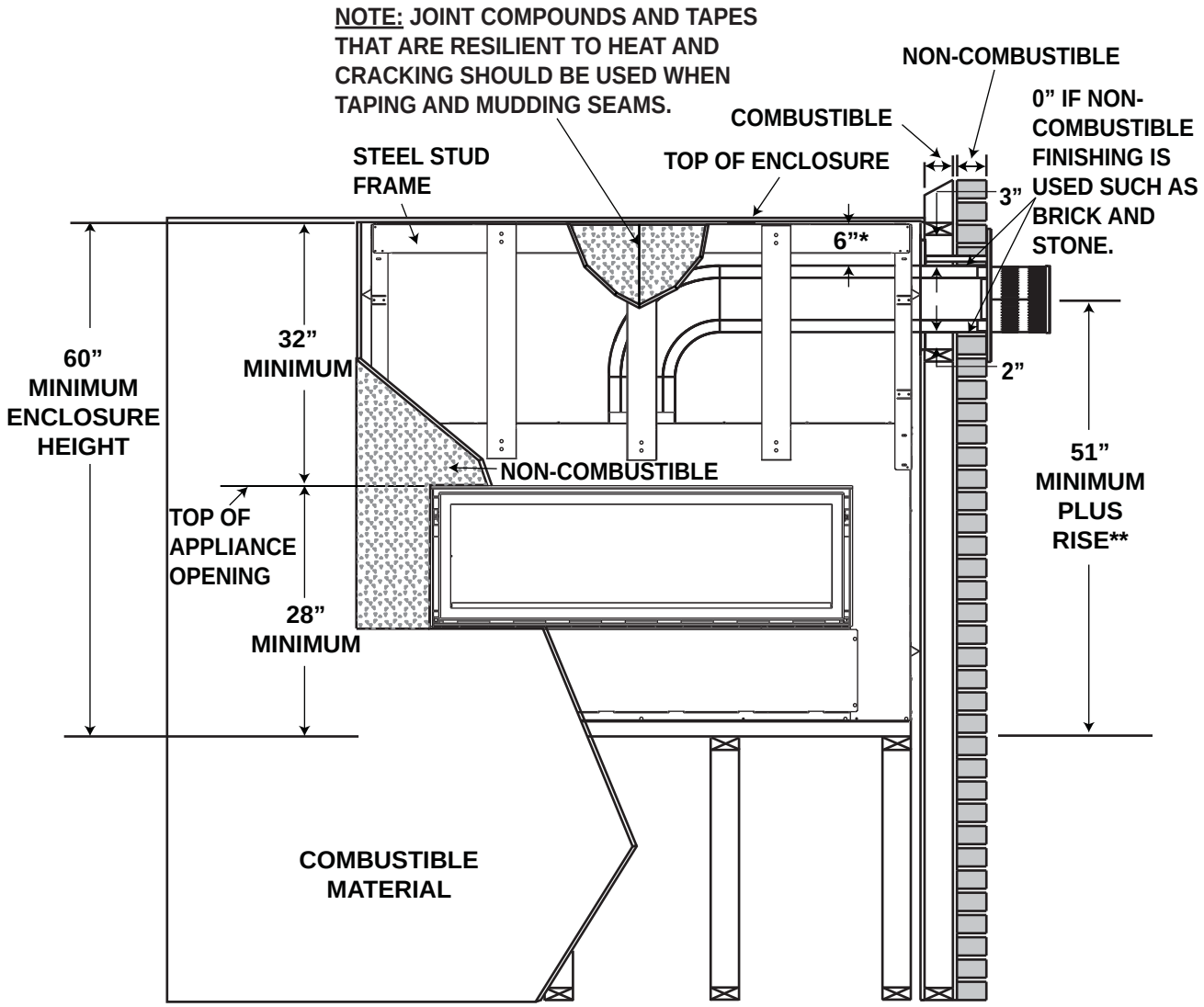

* Within the appliance enclosure a 6” clearance between the top of the vent pipe and combustible materials is required. All other clearances within the enclosure, including where the vent pipe exits the enclosure are subject to 2” to the sides and bottom and 3” to the top for horizontal and 1” for vertical.
** See venting section.

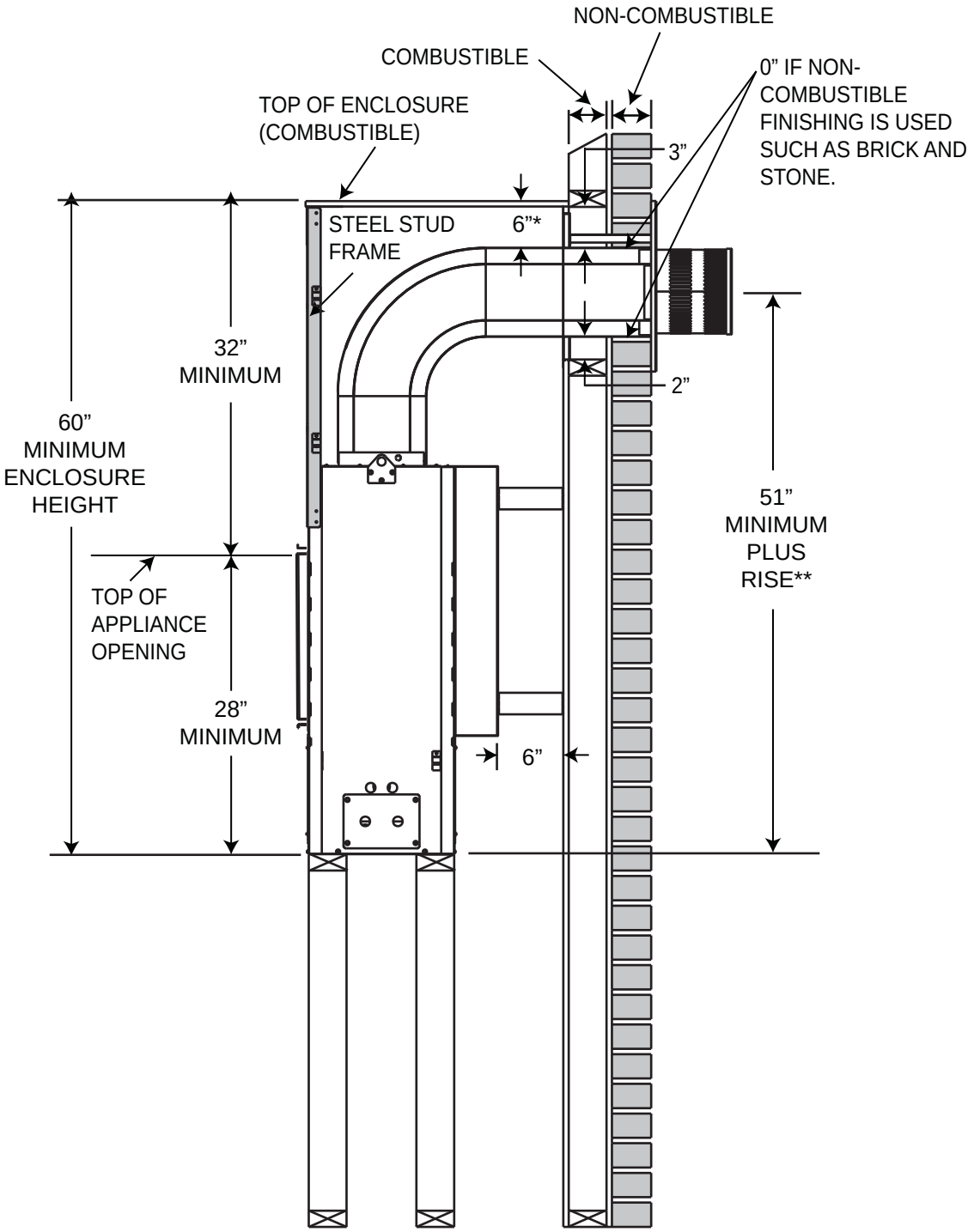

* Within the appliance enclosure a 6” clearance between the top of the vent pipe and combustible materials is required. All other clearances within the enclosure, including where the vent pipe exits the enclosure are subject to 2” to the sides and bottom and 3” to the top for horizontal and 1” for vertical.
** See venting section.

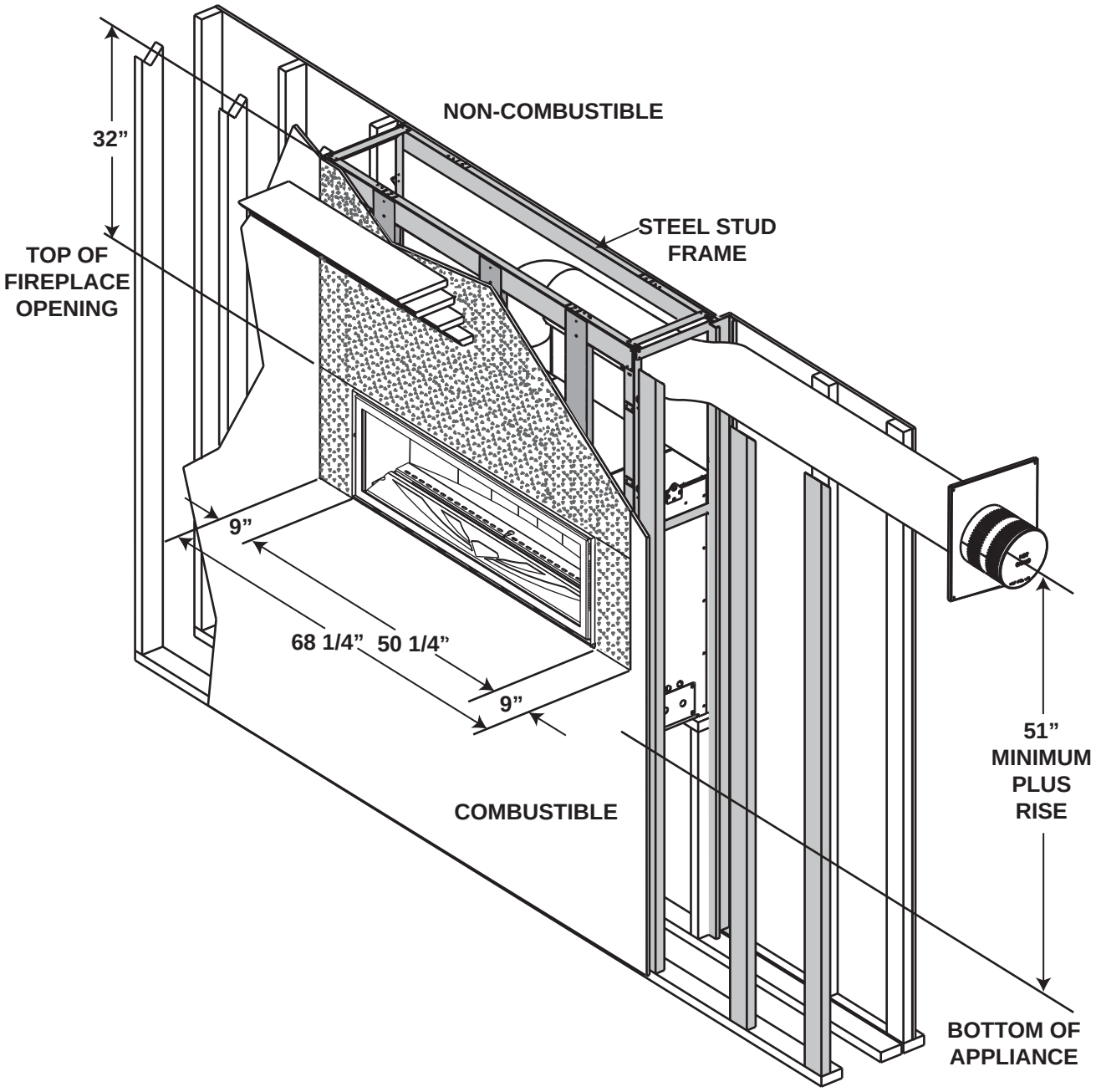
NON-COMBUSTIBLE
32”
STEEL STUD
FRAME
TOP OF
FIREPLACE
OPENING
9”
68 1/4”
50 1/4”
9”
COMBUSTIBLE
51”
MINIMUM
PLUS
RISE
BOTTOM OF
APPLIANCE

5.4 INSTALLING CEMENT BOARD

⚠ WARNING

A NON-COMBUSTIBLE FINISHING MATERIAL BORDER, SUCH AS BRICK, MARBLE, GRANITE, ETC. IS REQUIRED. FINISHING WITH JUST CEMENT BOARD TO THE SIDES AND TOP OF THE APPLIANCE IS NOT ALLOWED.

THE SURFACE ABOVE THE APPLIANCE GETS VERY HOT. IF PROPER FINISHING MATERIALS ARE NOT USED, CRACKING CAN OCCUR.

If using the supplied cement board that entire surface must be covered with a non-combustible decorative finish such as brick, marble, granite, etc. The ideal finishing material is dry stack cultured stone.

It is not required to cover the entire surface with a non-combustible decorative finishing material if using a full single sheet of cement board where required. However, a minimum of one course of tile is required to border the sides and top around the door opening. The larger the tile size, the better.
If only a painted surface is desired, a full single sheet of Wonder Board cement board must be used.

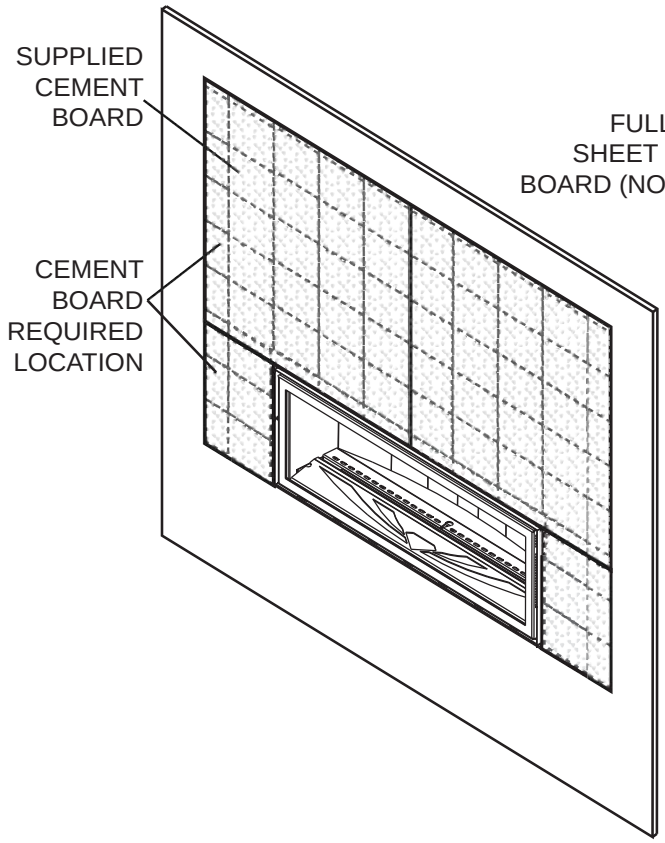

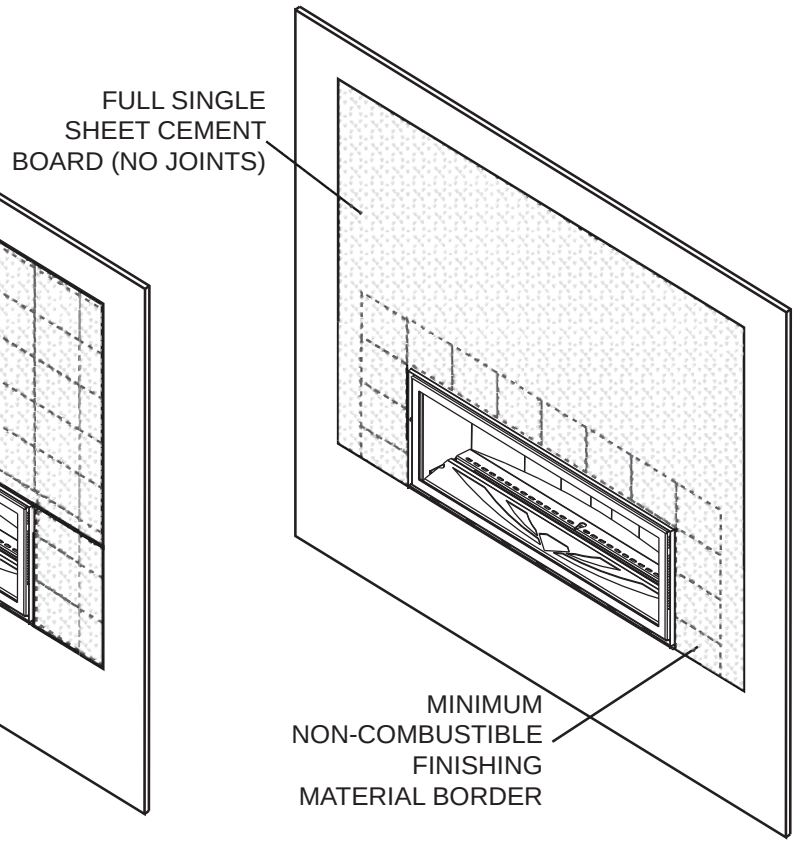

NOTE: Keep the securing screws for the cement board a minimum of 6” from the side and top of the door opening. This will allow for any slight movement in the normal operation of the appliance.

Joint Compound where required
Joint compounds such as Durabond 90 and tapes that are resilient to heat and cracking should be used when taping and mudding seams.

Setting tiles and grouting
We recommend you use tiles with a dry butt joint to be installed using a two-part mortar with an acrylic latex additive, such as Mapei Kerabond/Kerlastic, to allow for slight movement in the normal operation of the appliance.
If grout is used between the tiles, a polymer-based grout, such as Mapei Ultracolour plus, is recommended.

Primer/Paint
For a painted surface, use a 100% acrylic latex primer and finish coat. Light coloured paints may discolour.

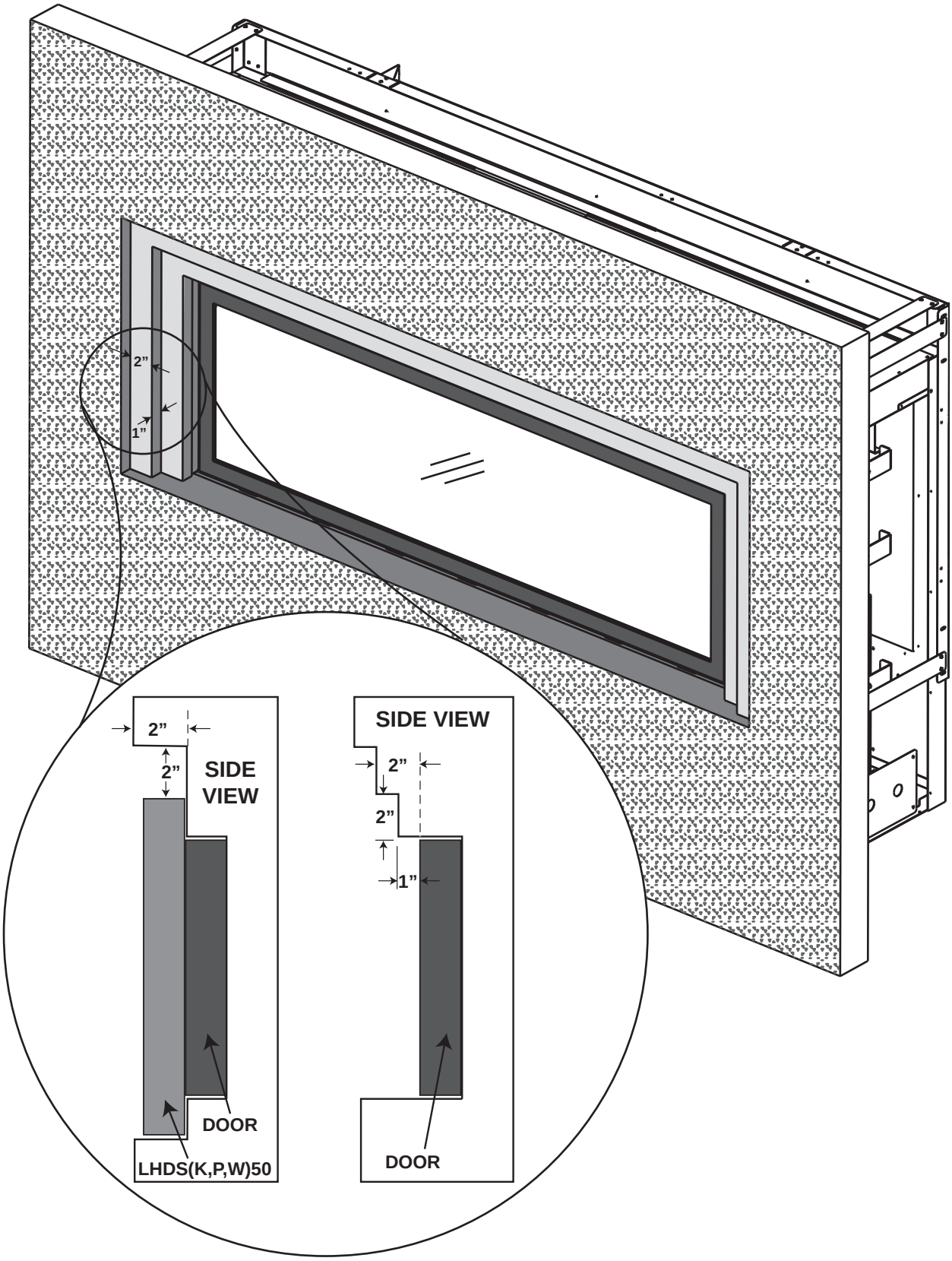

WARNING: Non-combustible finishing material tight to the frame around the operating door must not project more than 1” from the face of the door (above the door and sides only). If greater projections are needed, increase the clearance to the sides and top by 2” for every 1” projection.
If using LHDS(K,P,W)50 surround , then 2” clearance above the frame is required before projecting out a maximum 2”. If greater projections are needed, increase the clearance to the top by 2” for every 1” of additional projection.

5.5 ALCOVE INSTALLATION

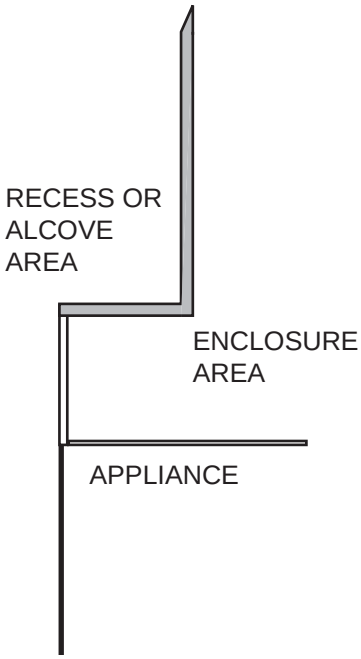

<u>NOTE:</u> Recesses or alcoves above the appliance can be made as deep as desired provided the minimum clearances to combustibles are maintained.

Non-combustible material can be used, provided the minimum clearances to combustible materials are applied.

The minimum enclosure volume must be increased by no less than the volume of the recess. This adjustment can be made by increasing any or all of the height, width and depth of the enclosure.

71.2

5.6 MINIMUM COMBUSTIBLE MANTEL CLEARANCES

⚠ WARNING

RISK OF FIRE, MAINTAIN ALL SPECIFIED AIR SPACE CLEARANCES TO COMBUSTIBLES. FAILURE TO COMPLY WITH THESE INSTRUCTIONS MAY CAUSE A FIRE OR CAUSE THE APPLIANCE TO OVERHEAT. ENSURE ALL CLEARANCES (I.E. BACK, SIDE, TOP, VENT, MANTEL, FRONT, ETC.) ARE CLEARLY MAINTAINED.

WHEN USING PAINT OR LACQUER TO FINISH THE MANTEL, THE PAINT OR LACQUER MUST BE HEAT RESISTANT TO PREVENT DISCOLOURATION.

73.1

Combustible mantel clearance can vary according to the mantel depth. Use the graph to help evaluate the clearance needed.

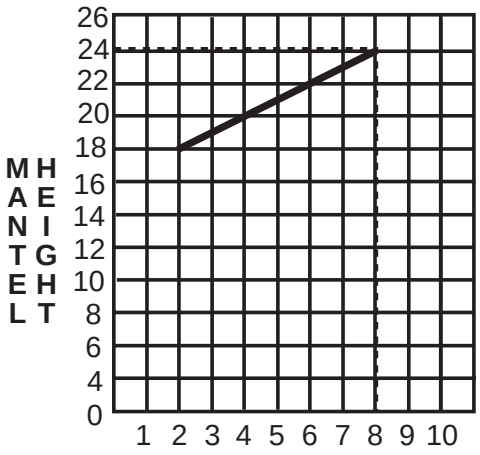

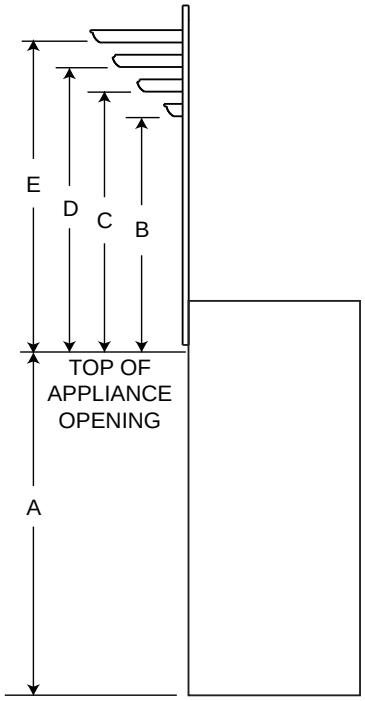

MANTEL DIMENSIONS		
Ref	**Height**	**Depth**
A	28”	
B	18”	2”
C	20”	4”
D	22”	6”
E	24”	8”

6.0 FINISHING

⚠ WARNING
RISK OF FIRE!
NEVER OBSTRUCT THE FRONT OPENING OF THE APPLIANCE.
THE FRONT OF THE APPLIANCE MUST BE FINISHED WITH ANY NON-COMBUSTIBLE MATERIALS SUCH AS BRICK, MARBLE, GRANITE, ETC., PROVIDED THAT THESE MATERIALS DO NOT GO BELOW THE SPECIFIED DIMENSION AS ILLUSTRATED.
DO NOT STRIKE, SLAM OR SCRATCH GLASS. DO NOT OPERATE APPLIANCE WITH GLASS REMOVED, CRACKED, BROKEN OR SCRATCHED.
FACING AND/OR FINISHING MATERIAL MUST NEVER OVERHANG INTO THE APPLIANCE OPENING.
THE GLASS DOOR ASSEMBLY IS DESIGNED TO PIVOT FORWARD WHEN RELIEVING EXCESS PRESSURE THAT MIGHT OCCUR. FINISHING OR OTHER MATERIALS MUST NOT BE LOCATED IN THE OPENING SURROUNDING THE DOOR AS THIS WILL INTERFERE WITH THE DOORS ABILITY TO RELIEVE THE PRESSURE.

72.6

6.1 BEVELLED TRIM REMOVAL

A. Pull the bevelled trim up and out towards yourself.

B. Lift the trim up off the claws and remove the trim off the two shoulder screws.

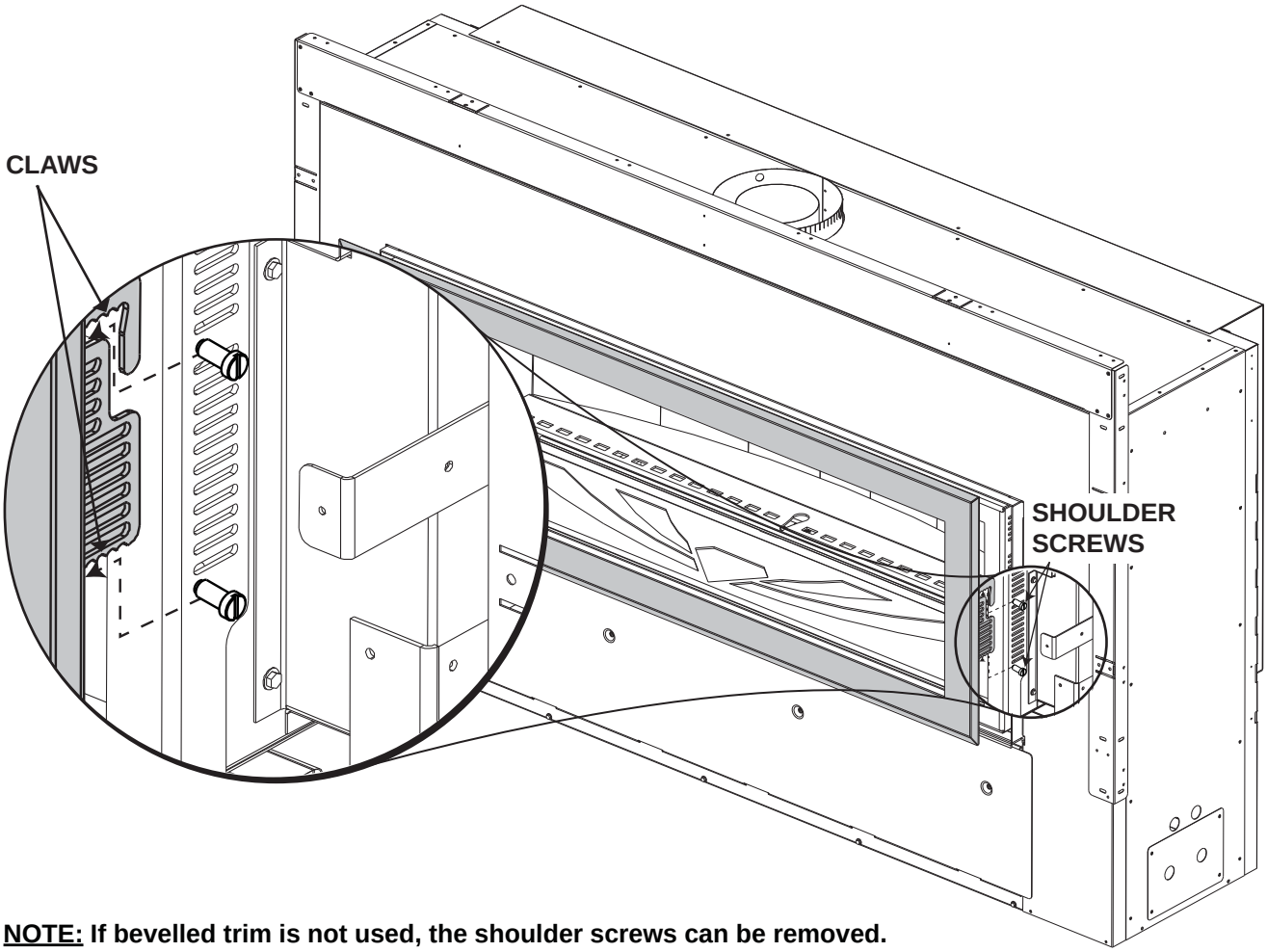

<u>NOTE:</u> If bevelled trim is not used, the shoulder screws can be removed.

6.2 DOOR REMOVAL / INSTALLATION

⚠ WARNING

GLASS MAY BE HOT, DO NOT TOUCH GLASS UNTIL COOLED.

THE DOOR LATCHES ARE PART OF A SAFETY SYSTEM AND MUST BE PROPERLY ENGAGED. DO NOT OPERATE THE APPLIANCE WITH LATCHES DISENGAGED.

FACING AND/OR FINISHING MATERIALS MUST NOT INTERFERE WITH AIR FLOW THROUGH AIR OPENINGS, LOUVRES OPENINGS, OPERATION OF LOUVRES OR DOORS OR ACCESS FOR SERVICE. OBSERVE ALL CLEARANCES WHEN APPLYING COMBUSTIBLE MATERIALS.

BEFORE DOOR IS REMOVED TURN THE APPLIANCE OFF AND WAIT UNTIL APPLIANCE IS COOL TO THE TOUCH. DOORS ARE HEAVY AND FRAGILE SO HANDLE WITH CARE.

75.1

FRONT - ACCESS SIDE

A. Locate the door latches 6” from the top corners of the door between the main door and framing edge.

B. Insert the latch key and pivot up to disengage door latches.

C. Tilt the top of the door forward until you can grab the sides of the door. Lift up and out of the bottom door retainer.

D. When re-installing the door, lift onto the bottom door retainer, tilt the top towards the appliance and secure the latches.

BACK OF TWO SIDED ONLY

E. Remove the four screws holding the door to the appliance.

F. Tilt the top of the door forward until you can grab the sides of the door. Lift up and out of the bottom door retainer.

G. When re-installing the door, lift onto the bottom door retainer, tilt the top towards the appliance and secure with the four removed screws.

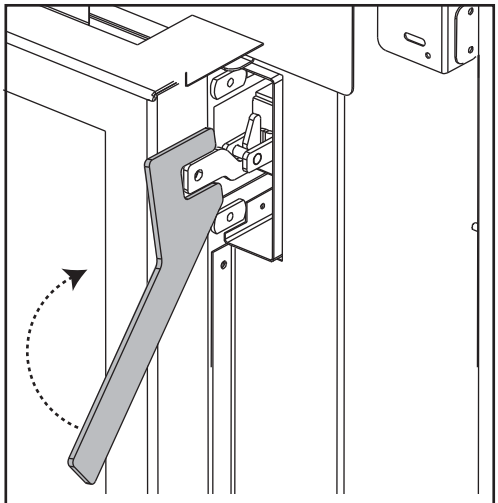

IMPORTANT: Once latches are engaged, test that the door is secure and will not fall forward before letting go.

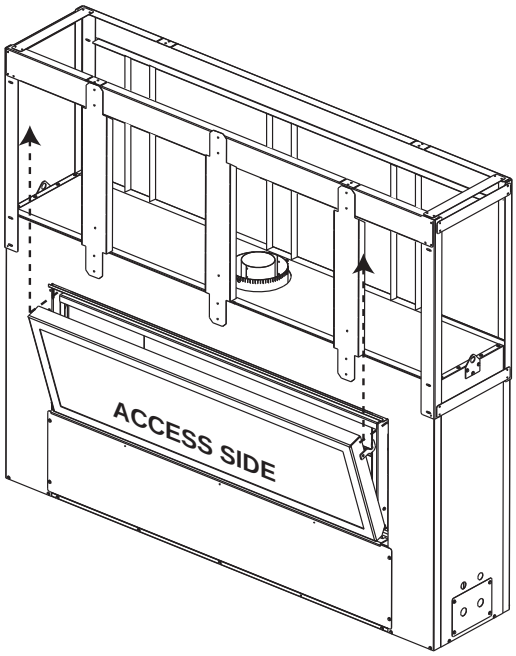

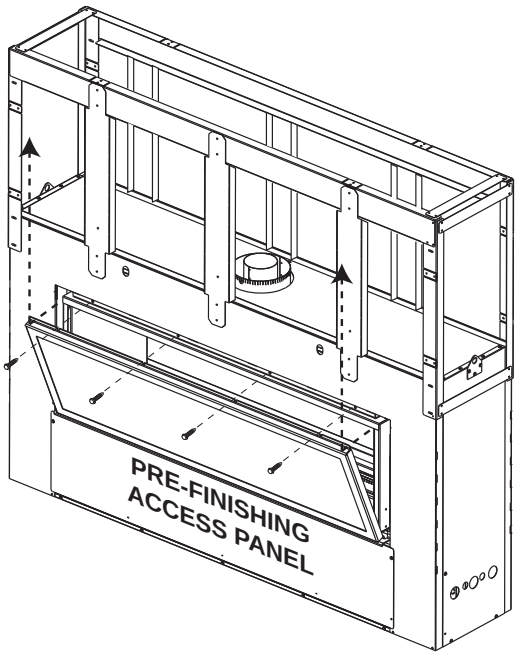

6.4 MEDIA INSTALLATION

⚠ WARNING

CLEAN THE GLASS MEDIA PRIOR TO INSTALLATION. BEFORE APPLYING THE CLEANED GLASS, ENSURE THAT IT IS DRY.

DO NOT CHANGE OR SUBSTITUTE THE GLASS MEDIA MATERIAL PROVIDED WITH THIS APPLIANCE. IF REPLACING, USE ONLY THE REPLACEMENT GLASS MEDIA AVAILABLE FROM YOUR AUTHORIZED DEALER / DISTRIBUTOR.

Evenly spread the glass media onto the media tray, ensuring no glass media falls onto the burner. If this happens, insert a clean bag into your vacuum cleaner and vacuum out the glass media. Replacement glass can be purchased from your local authorized dealer / distributor.

CLEANING GLASS MEDIA

Glass media may have a fine oil residue that needs to be cleaned prior to installation. Clean the glass with mild dish soap, drain, rinse thoroughly and dry before placing around the burner.

74.2A

CLEANING CRYSTALS

To help maintain the luster and beauty of these crystals over time, carefully polish them by using a soft lint-free cloth. If they become heavily soiled, you may use a mild detergent to wash them individually by hand, as you would a fine chandalier. Please avoid rubbing the crystals together. Do not use a dishwasher.

6.3 UNIQUE INSTALLATIONS

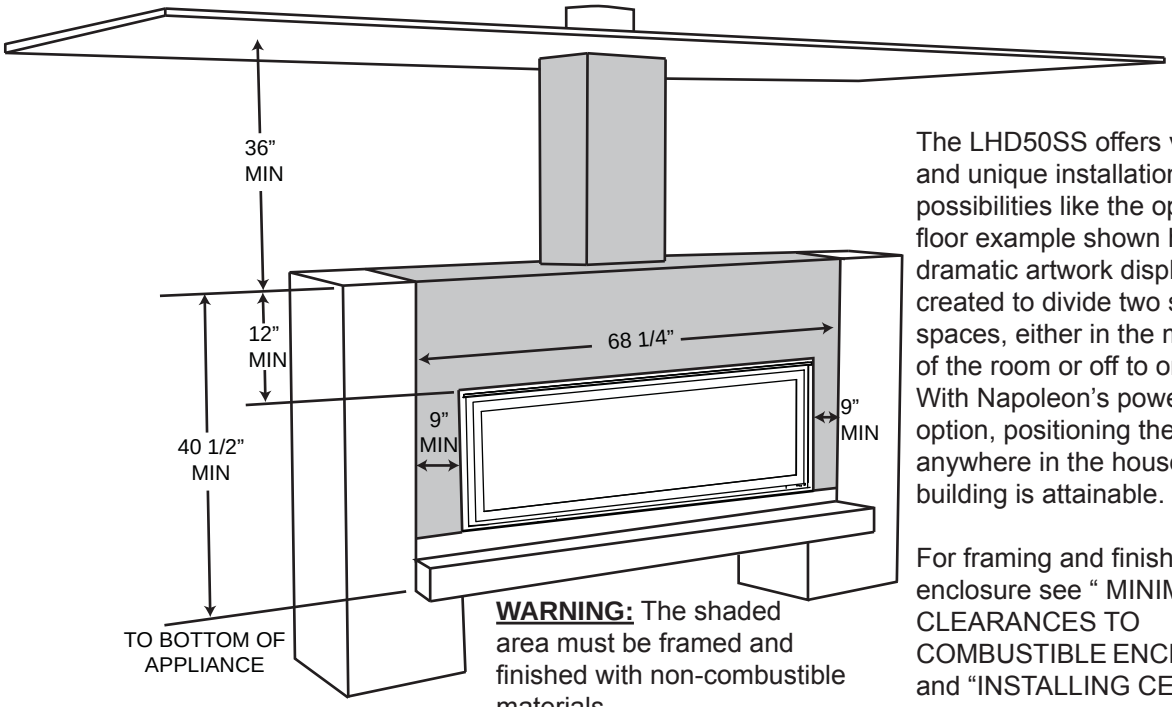

WARNING: The shaded area must be framed and finished with non-combustible materials.

The LHD50SS offers versatile and unique installation possibilities like the open floor example shown here. A dramatic artwork display can be created to divide two separate spaces, either in the middle of the room or off to one side. With Napoleon’s power venting option, positioning the appliance anywhere in the house or building is attainable.

For framing and finishing the enclosure see “ MINIMUM CLEARANCES TO COMBUSTIBLE ENCLOSURES” and “INSTALLING CEMENT BOARD” sections.

7.0 ELECTRICAL CONNECTION

⚠ WARNING

DO NOT USE THIS APPLIANCE IF ANY PART HAS BEEN UNDER WATER. CALL A QUALIFIED SERVICE TECHNICIAN IMMEDIATELY TO HAVE THE APPLIANCE INSPECTED FOR DAMAGE TO THE ELECTRICAL CIRCUIT.

RISK OF ELECTRICAL SHOCK OR EXPLOSION. DO NOT WIRE 110V TO THE VALVE OR TO THE APPLIANCE WALL SWITCH. INCORRECT WIRING WILL DAMAGE CONTROLS.

ALL WIRING SHOULD BE DONE BY A QUALIFIED ELECTRICIAN AND SHALL BE IN COMPLIANCE WITH LOCAL CODES. IN THE ABSENCE OF LOCAL CODES, USE THE CURRENT CSA22.1 CANADIAN ELECTRIC CODE IN CANADA OR THE CURRENT NATIONAL ELECTRIC CODE ANSI/NFPA NO. 70 IN THE UNITED STATES.

ALWAYS LIGHT THE PILOT WHETHER FOR THE FIRST TIME OR IF THE GAS SUPPLY HAS RAN OUT, WITH THE GLASS DOOR OPENED OR REMOVED.

69.2

If access to the control area is necessary BEFORE INSTALLATION, remove the pre-finishing access panel. The access panel must be re-installed before operating the appliance.

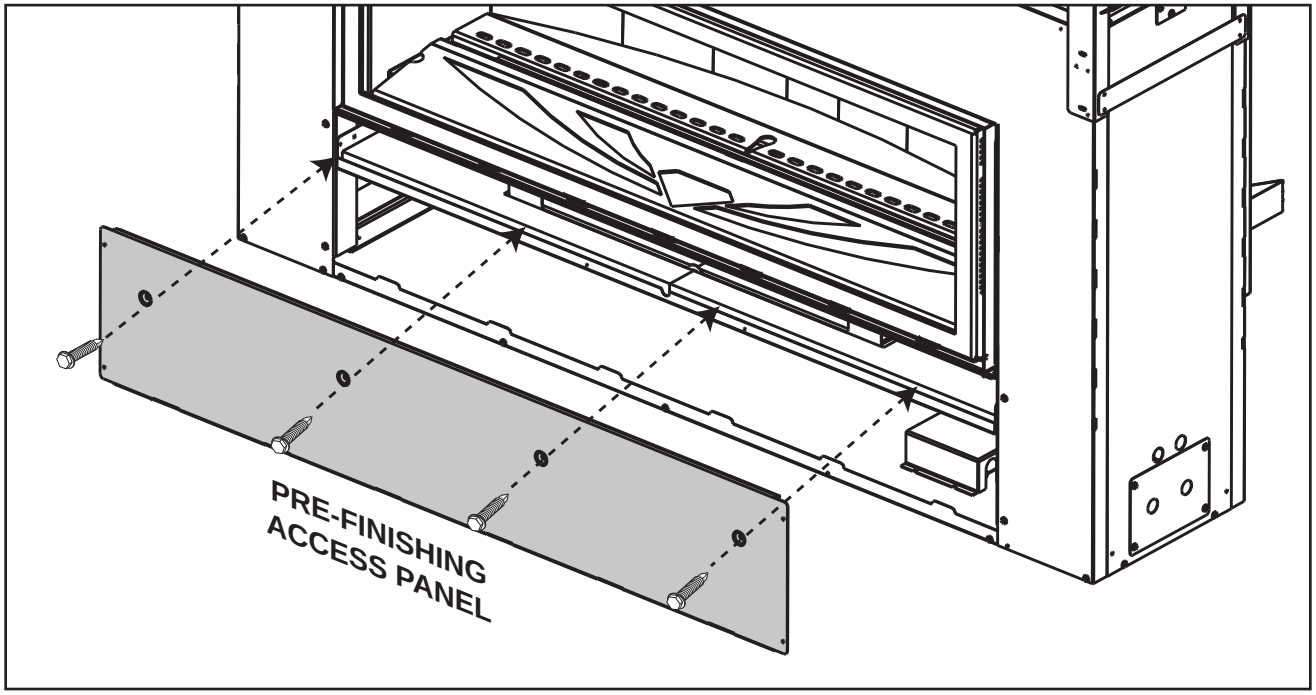

Before finishing in the appliance test the operation using the remote control, cycling it through all of its different modes, see “OPERATION” section. Once finished in, access to the control components can only be done through the inside of the appliance.

NOTE: Control module ON/OFF switch should always be in the “ON” position. If for any reason the module is turned “OFF”, the components plugged into the module won’t have power.

7.1 HARD WIRING CONNECTION

It is necessary to hard wire this appliance.
Permanently framing the appliance with an enclosure, requires the appliance junction box to be hard wired. This appliance must be electrically connected and grounded in accordance with local codes. In the absence of local codes, use the current CSA C22.1 Canadian electrical code in Canada or the ANSI/NFPA 70-1996 national electrical code in the United States.

7.2 RECEPTACLE WIRING DIAGRAM

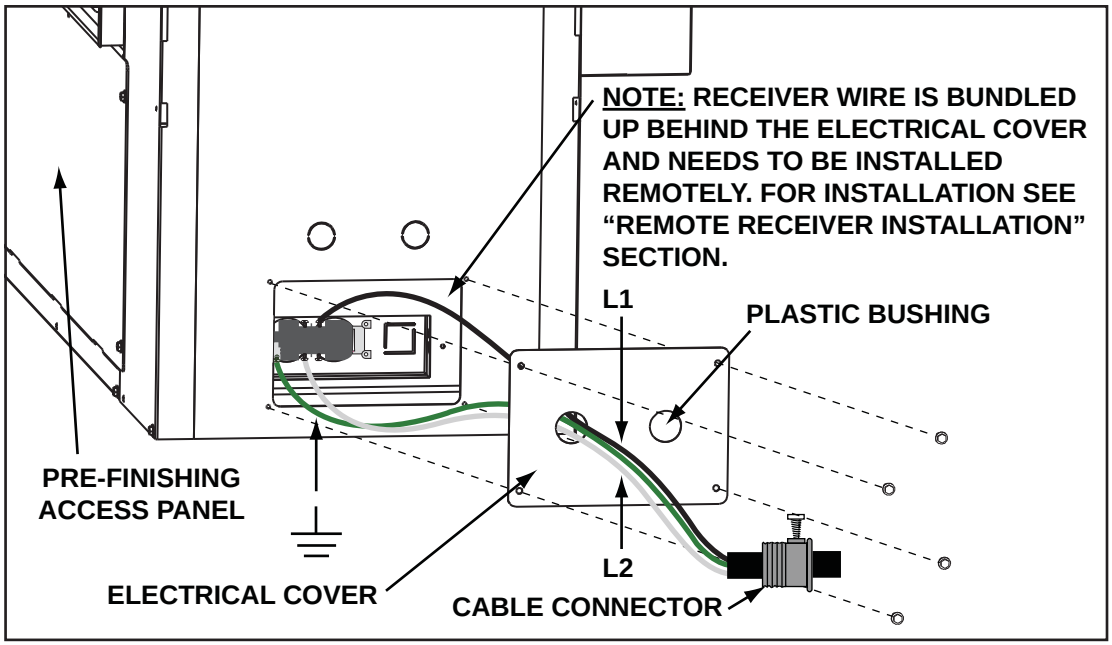

7.3 REMOTE RECEIVER INSTALLATION

Receiver must be located within 8 feet of this side of the appliance and must be accessible for programming the remote.

Install the receiver into a standard electrical switch box. Determine an appropriate location and install the electrical box.

NOTE: Ensure the 3 position slider switch is in the "REMOTE" position (middle).

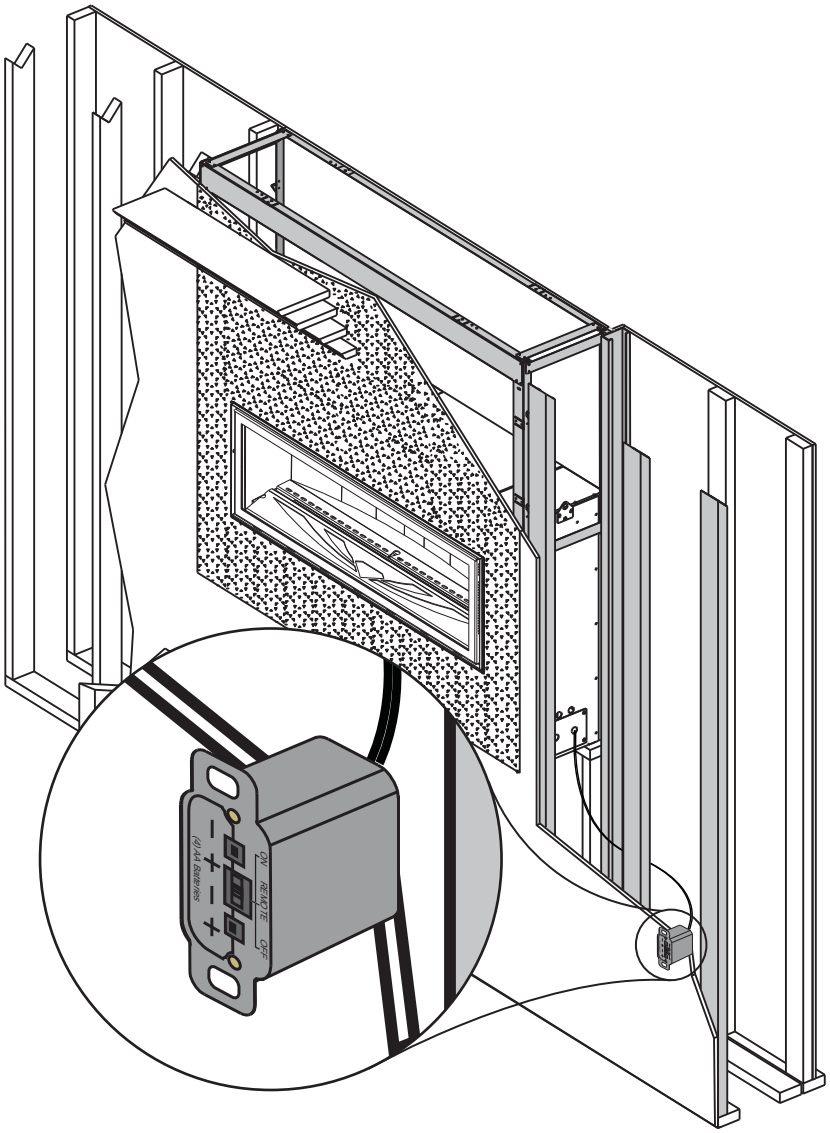

7.4 SCHEMATIC

⚠ WARNING

DO NOT WIRE 110 VOLTS TO THE VALVE OR WALL SWITCH.

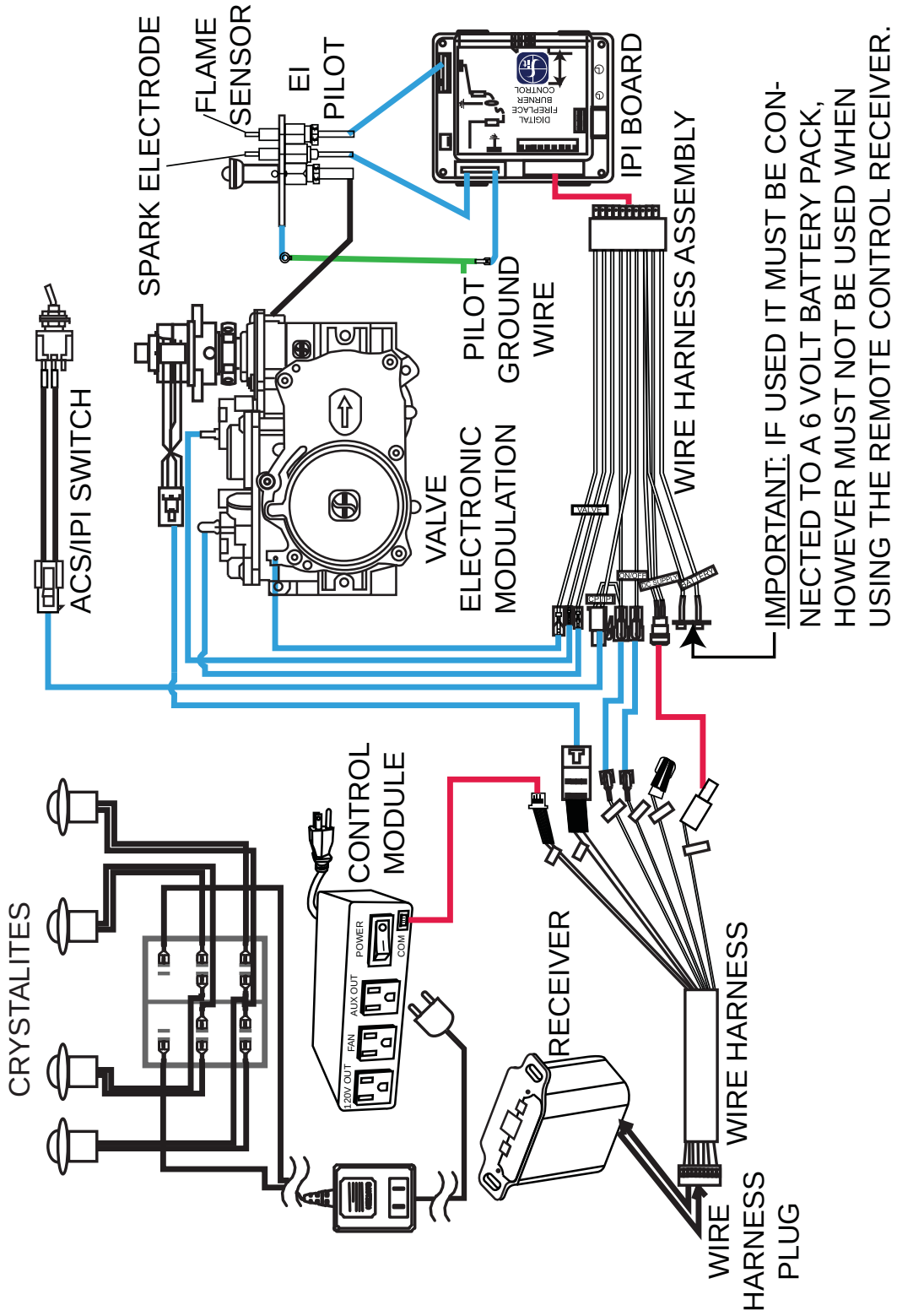

8.0 OPERATION

⚠ WARNING

IF YOU DO NOT FOLLOW THESE INSTRUCTIONS EXACTLY, A FIRE OR EXPLOSION MAY RESULT CAUSING PROPERTY DAMAGE, PERSONAL INJURY OR LOSS OF LIFE.

ALWAYS LIGHT THE PILOT WHETHER FOR THE FIRST TIME OR IF THE GAS SUPPLY HAS RUN OUT WITH THE GLASS DOOR OPENED OR REMOVED.

8.1 GENERAL TRANSMITTER LAYOUT

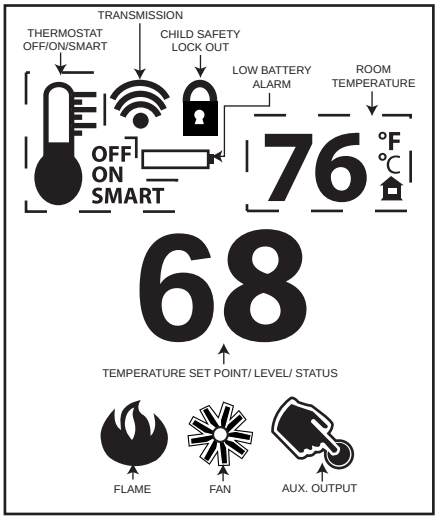

35.1

8.2 APPLIANCE OPERATION

A. Install 4 AA batteries into the receiver battery bay as indicated on the battery cover (+/-). (Only required as back up to household electricity).
While there is a provision to connect a 6V battery pack (do not use a 9 volt battery), it must not be used when using the remote control receiver.

B. Place the 3 position slider switch of the receiver in the “Remote” position.

C. Using the end of a paper clip, or other similar object, insert the end of the paper clip into the hole marked “PRG” on the receiver front cover. The receiver will “beep” three (3) times to indicate that it is ready to synchronize with the transmitter.

D. Install the 3 AAA batteries in the transmitter battery bay, located on the base of the transmitter.
With the batteries already installed in the transmitter, push the “ON” button. The receiver will “beep” four times to indicate the transmitter’s command is accepted and set to the particular code of that transmitter. The system is now initialized.

35.3

8.3 HAND HELD REMOTE OPERATIONS

A. Press the ON/OFF key on the transmitter. The transmitter display will show all active icons on the screen. A single “beep” from the receiver will confirm reception of the command.

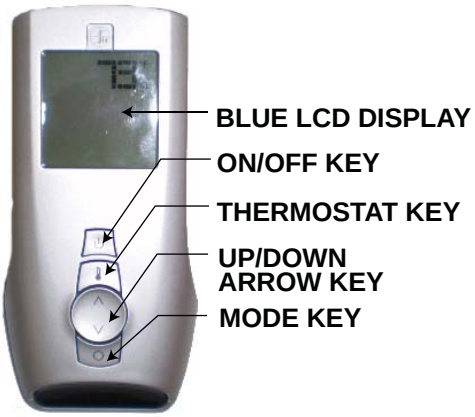

35.4

8.4 TEMPERATURE DISPLAY

A. With the system in the “OFF” position, press the Thermostat Key and the Mode Key at the same time to change from degrees F to C.

B. Look at the LCD screen on the Transmitter to verify that a C or F is visible to the right of the Room Temperature display.

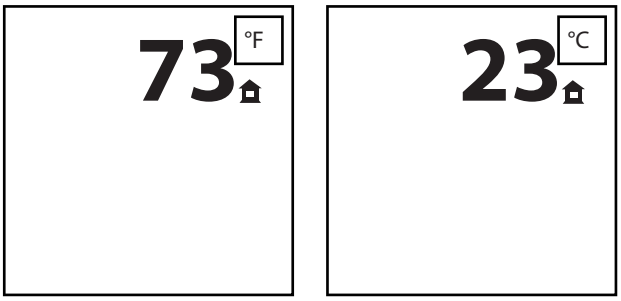

35.5

8.5 ROOM THERMOSTAT

The remote transmitter can operate as a room thermostat. The thermostat can be set to a desired temperature to control the comfort level in the room.

A. Press the Thermostat Key. The LCD display on the Transmitter will show that the room is “ON” and the set temperature is now displayed.

B. To adjust the set temperature, press the Up/Down Arrow Keys until the desired set temperature is displayed on the LCD screen of the Transmitter.

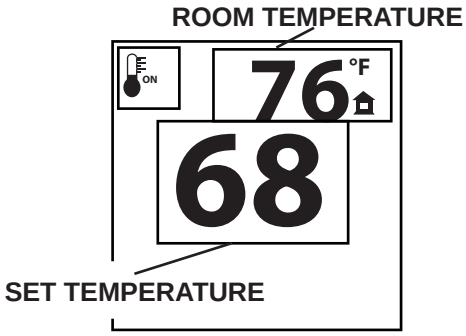

35.6

8.6 SMART THERMOSTAT

The Smart Thermostat function adjusts the flame height according to the difference between the set temperature and the actual room temperatures. As the room temperature gets closer to the set point the Smart Function will automatically adjust the flame down.

A. Press the thermostat key until the word “SMART” appears to the right of the temperature bulb graphic.

B. To adjust the set temperature, press the Up/Down arrow keys until the desired set temperature is displayed on the LCD screen at the Transmitter.

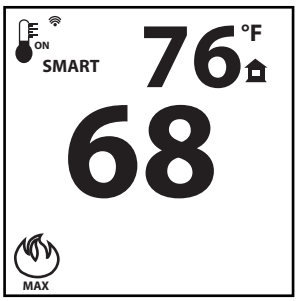

35.7

8.7 FLAME HEIGHT

The remote control has six (6) flame levels. With the system on and the flame level at the maximum, press the Down Arrow Key once and it will reduce the flame height by one step until the flame is turned off.
The Up Arrow Key will increase the flame height each time it is pressed. If the Up Arrow Key is pressed while the system is on but the flame is off, the flame will come on the high position. A single “beep” will confirm reception of the command.

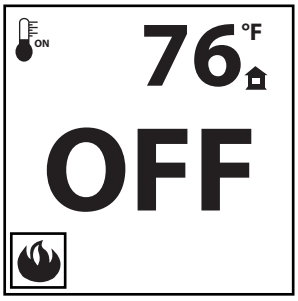

FLAME OFF

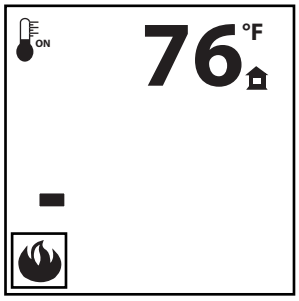

FLAME AT LEVEL 1

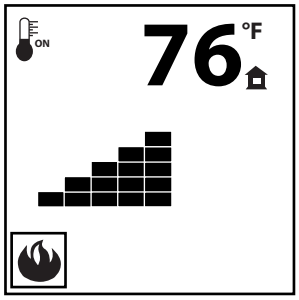

FLAME AT LEVEL 5

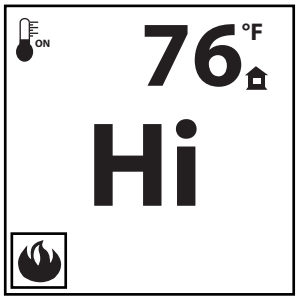

FLAME AT “HI” LEVEL 6

35.8

8.8 CHILD PROOF FUNCTION

This function will lock the keys to avoid unsupervised operation.

A. Press the MODE and UP keys at the same time.

B. To de-activate this function, press the MODE and UP keys at the same time.

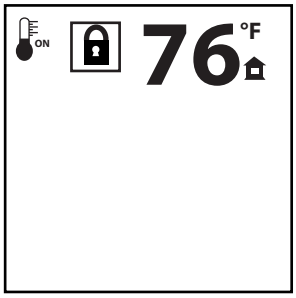

35.10

8.9 CRYSTALITES

The auxiliary function controls the AUX power outlet on the Control Module which controls the Crystalites™.

A. Use the Mode Key to guide you to the AUX icon.

B. Pressing the Up Arrow Key will activate the Crystalites™.

C. Pressing the Down Arrow Key will turn the Crystalites™ off. A single “beep” will confirm the reception of the command.

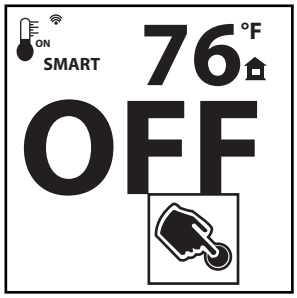

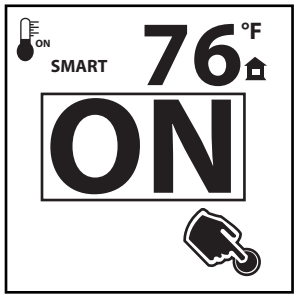

35.11

8.10 LOW BATTERY / MANUAL BYPASS

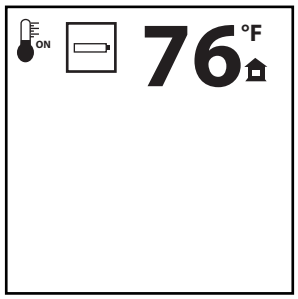

The life span of the remote batteries depends on various factors: quality of the batteries, the number of ignitions, the number of charges to the room thermostat set point, etc.

When the transmitter batteries are low, a Battery Icon will appear on the LCD display before all battery power is lost. When the batteries are replaced this icon will disappear.

Not applicable when plugged into 110V.
When the receiver batteries are low, no “beep” will be emitted from the receiver when it receives an ON/OFF command. This in an alert for the receiver that there’s low battery. When the batteries are replaced the “beep” will be emitted from the receiver when the ON/OFF key is pressed.

If the batteries of the receiver or transmitter are low, the appliance can be turned on manually by sliding the three position slider switch on the receiver to the “ON” position. This will bypass the remote control feature and the appliance main burner will come on if the gas valve is in the “ON” position.

35.13

8.11 IN THE EVENT OF A POWER FAILURE

If the receiver is equipped with batteries they will enable flame height control, ON/OFF or thermostat function to control the fireplace during a power failure. Refer to “APPLIANCE OPERATION” section when communications between receiver and transmitter have been lost. The will receiver emit a “beep” sound to confirm programming has been successful once power is restored. During a power failure, if the fireplace was on, the flame height will stay at the setting prior to the failure. If off when the failure occurs and then turned on, the flame height will come on at “HI”. The flame height can then be controlled by the remote.

35.14

8.12 CONTROL MODULE

The control module offers a remotely actuated 120V AUX outlet for the accent lights and a constantly powered 120V outlet.

<u>NOTE:</u> Control module ON/OFF switch should always be in the “ON” position. If for any reason the module is turned “OFF”, the components plugged into the module won’t have power.

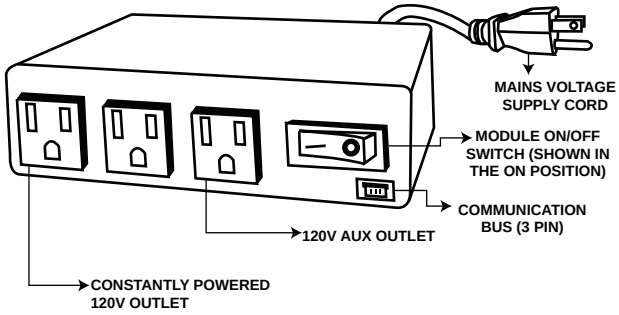

35.16

8.13 ANTI CONDENSATION CONTROL SWITCH

This appliance has the option to go from an electronic intermittent pilot ignition to a standing pilot for cold climates. The anti condensation control switch (standing pilot) is located to the right of the main viewing door frame (Operating Side). Using your finger switch the pilot from one mode to the other.

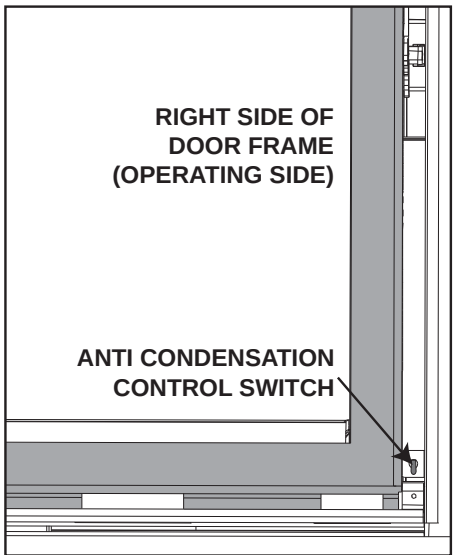

9.0 OPERATING INSTRUCTIONS

⚠ WARNING

IF YOU DO NOT FOLLOW THESE INSTRUCTIONS EXACTLY, A FIRE OR EXPLOSION MAY RESULT CAUSING PROPERTY DAMAGE, PERSONAL INJURY OR LOSS OF LIFE.

ALWAYS LIGHT THE PILOT WHETHER FOR THE FIRST TIME OR IF THE GAS SUPPLY HAS RUN OUT WITH THE GLASS DOOR OPENED OR REMOVED.

Ensure that a continuous gas flow is at the burner before installing the door. When lit for the first time, the appliance will emit an odor for a few hours. This is a normal temporary condition caused by the “burn-in” of paints and lubricants used in the manufacturing process and will not occur again. After extended periods of non-operation such as following a vacation or a warm weather season, the appliance may emit a slight odor for a few hours. This is caused by dust particles in the heat exchanger burning off. In both cases, open a window to sufficiently ventilate the room.

FOR YOUR SAFETY READ BEFORE LIGHTING:

A. This appliance is equipped with an ignition device which automatically lights the pilot. Do not try to light by hand.
B. Before operating smell all around the appliance area for gas and next to the floor because some gas is heavier than air and will settle on the floor.
C. Do not use this appliance if any part has been under water. Immediately call a qualified service technician to inspect the appliance and replace any part of the control system and any gas control which has been under water.

WHAT TO DO IF YOU SMELL GAS:

- Turn off all gas to the appliance.
- Open windows.
- Do not try to light any appliance.
- Do not touch any electric switch; do not use any phone in your building.
- Immediately call your gas supplier from a neighbor's phone. Follow the gas supplier's instructions.
- If you cannot reach your gas supplier, call the fire department.

LIGHTING INSTRUCTIONS

A. Stop! Read the above safety information on this label.
B. Remove batteries from transmitter.
C. Turn off all electric power to the appliance.
D. This appliance is equipped with an ignition device which automatically lights the pilot. Do not try to light the pilot by hand.
E. Open the glass door.
F. Turn manual shutoff valve clockwise ↷ to off. Located behind the access panel.
G. Wait five (5) minutes to clear out any gas. If you smell gas including near the floor, **STOP!** Follow “B” in the above safety information on this label. If you don’t smell gas go to the next step.
H. Turn manual shutoff valve counter-clockwise ↶ to on.
I. Close the glass door.
J. Turn on all electric power to the appliance and re-install batteries into the transmitter.
K. Push the “ON” button on the transmitter. You should here an audible beep from the receiver which indicates communication. (Refer to Appliance Operations for remote activation).

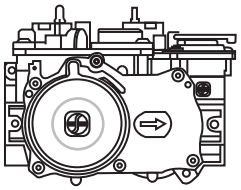

TO TURN OFF GAS

A. Turn off all electric power to the appliance if service is to be performed.
B. Access door inside the firebox must be removed to access the manual shutoff valve.
C. If alternate shut-off valve was installed it can be shutoff instead of going through the appliance to access the appliance shut off valve.

10.0 ADJUSTMENT

10.1 RESTRICTING VERTICAL VENTS

Vertical terminations may display a very active flame. If this appearance is not desirable, the vent exit must be restricted using restrictor plate, W500-0491 (supplied). This reduces the velocity of the exhaust gases, slowing down the flame pattern and creating a more traditional appearance.

Install the plate over the exhaust outlet.

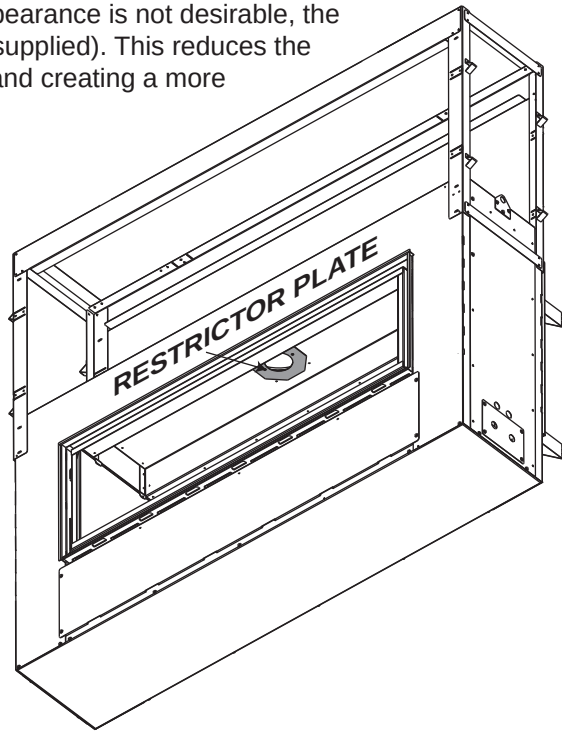

10.2 PILOT BURNER ADJUSTMENT

Adjust the pilot screw to provide properly sized flame. Turn in a clockwise direction to reduce the gas flow.

Check Pressure Readings:
Inlet pressure can be checked by turning screw (A) counter-clockwise 2 or 3 turns and then placing pressure gauge tubing over the test point. Gauge should read 7” (minimum 4.5”) water column for natural gas or 13” (11” minimum) water column for propane. Check that main burner is operating on “HI”.

Outlet pressure can be checked the same as above using screw (B). Gauge should read 3.5” water column for natural gas or 10” water column for propane. Check that main burner is operating on “HI”.

AFTER TAKING PRESSURE READINGS, BE SURE TO TURN SCREWS CLOCKWISE FIRMLY TO RESEAL. DO NOT OVERTORQUE.

Leak test with a soap and water solution.

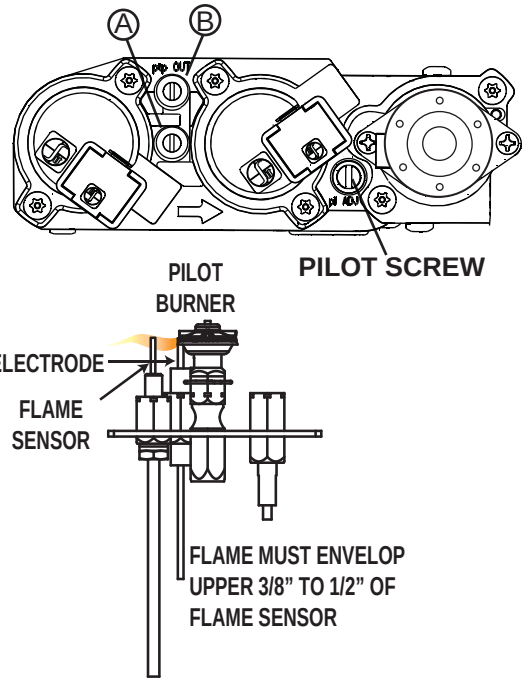

39.1A

10.3 VENTURI ADJUSTMENT

This appliance has an air shutter that has been factory set open according to the chart below:

Regardless of venturi orientation, closing the air shutter will cause a more yellow flame, but can lead to carboning. Opening the air shutter will cause a more blue flame, but can cause flame lifting from the burner ports. The flame may not appear yellow immediately; allow 15 to 30 minutes for the final flame colour to be established.

AIR SHUTTER ADJUSTMENT MUST ONLY BE DONE BY A QUALIFIED INSTALLER!

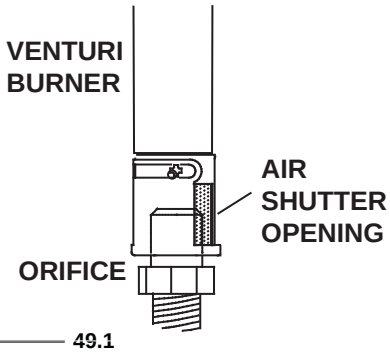

49.1

VENTURI ADJUSTMENT CHART	
FUEL	**LHD50SS**
NG	1/8”
LP	1/4”

10.4 FLAME CHARACTERISTICS

It’s important to periodically perform a visual check of the pilot and burner flames. Compare them to the illustration provided. If any flames appear abnormal call a service person.

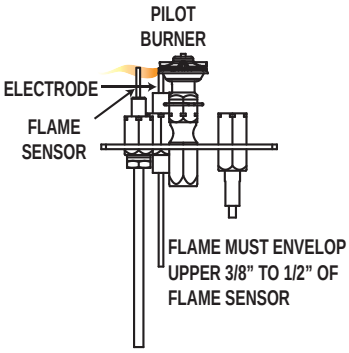

54.1A

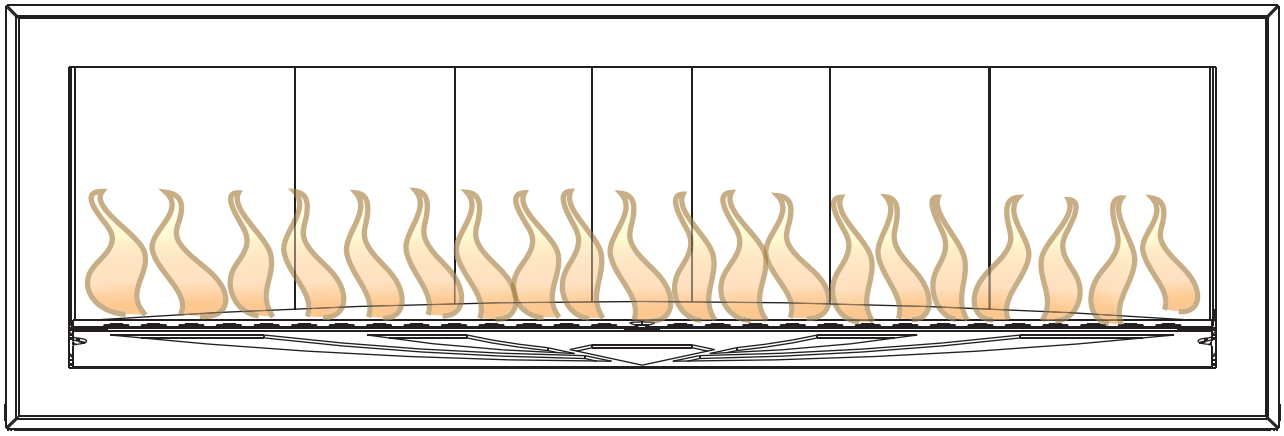

11.0 MAINTENANCE

⚠ WARNING

TURN OFF THE GAS AND ELECTRICAL POWER BEFORE SERVICING THE APPLIANCE.

APPLIANCE MAY BE HOT, DO NOT SERVICE UNTIL APPLIANCE HAS COOLED.

DO NOT USE ABRASIVE CLEANERS.

CAUTION: Label all wires prior to disconnection when servicing controls. Wiring errors can cause improper and dangerous operation. Verify proper operation after servicing. This appliance and its venting system should be inspected before use and at least annually by a qualified service person. The appliance area must be kept clear and free of combustible materials, gasoline or other flammable vapors and liquids. The flow of combustion and ventilation air must not be obstructed.

1. In order to properly clean the burner and pilot assembly, remove the logs, rocks and/or glass to expose both assemblies.
2. Keep the control compartment, media, burner, air shutter opening and the area surrounding the logs clean by vacuuming or brushing, at least once a year.
3. Check to see that all burner ports are burning. Clean out any of the ports which may not be burning or are not burning properly.
4. Check to see that the pilot flame is large enough to engulf the flame sensor and/or thermocouple / thermopile as well as reaches the burner.
5. Replace the cleaned logs, rocks or glass. Failure to properly position the media may cause carboning which can be distributed in the surrounding living area.
6. Check to see that the main burner ignites completely on all openings when turned on. A 5 to 10 second total light-up period is satisfactory. If ignition takes longer, consult your local authorized dealer / distributor.
7. Check that the gasketing on the sides, top and bottom of the door is not broken or missing. Replace if necessary.
8. If for any reason the vent air intake system is disassembled, re-install and re-seal per the instructions provided for the initial installation.

11.1 CONTROL ACCESS

Once the appliance has been framed and finished, control access can only be achieved by removing the valve train assembly. See “VALVE TRAIN ASSEMBLY” and “VALVE REMOVAL” sections. The following sub sections take you through the steps of control access as if the appliance is finished.

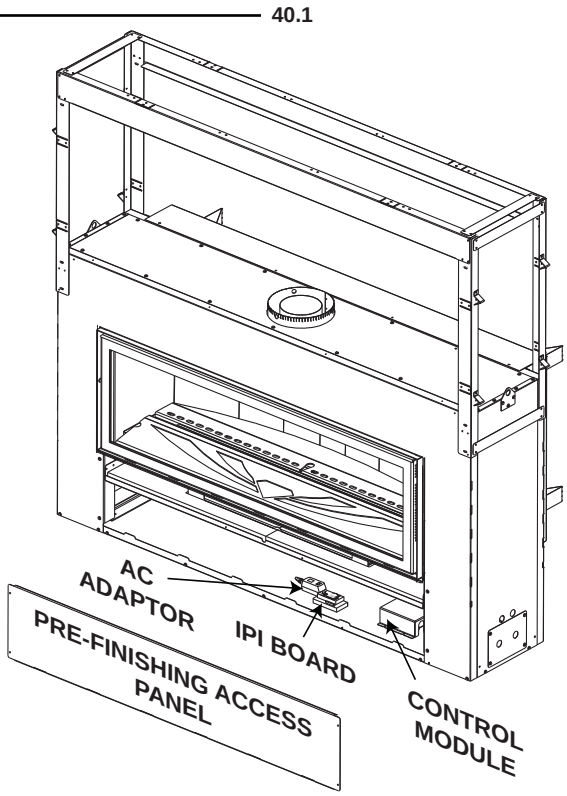

11.2 VALVE TRAIN ASSEMBLY

Remove one of the main doors, see “DOOR REMOVAL / INSTALLATION” section. Remove the media tray, see “BURNER REMOVAL” section. Remove the fourteen screws from the valve train assembly. See “VALVE REMOVAL” section.

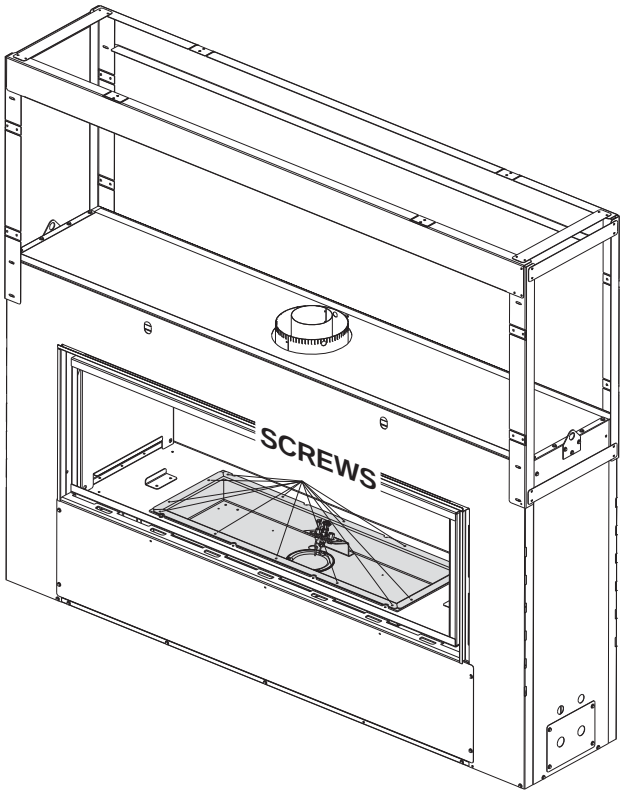

11.3 VALVE REMOVAL

A. Carefully lift the valve train assembly and turn off the manual shut-off valve, see “VALVE TRAIN ASSEMBLY” and “GAS INSTALLATION” section.

<u>NOTE:</u> A new gasket may be required, when re-installing the valve train assembly, contact your local Authorized dealer / distributor.

Disconnect the flex connector from the valve. Remove the valve wire connections, labeling each one to aid with re-connection.

B. Remove the four screws from the valve bracket and remove the valve.

C. Replace all components before returning the appliance to service.

D. Check for gas leaks by brushing on a soap and water solution.

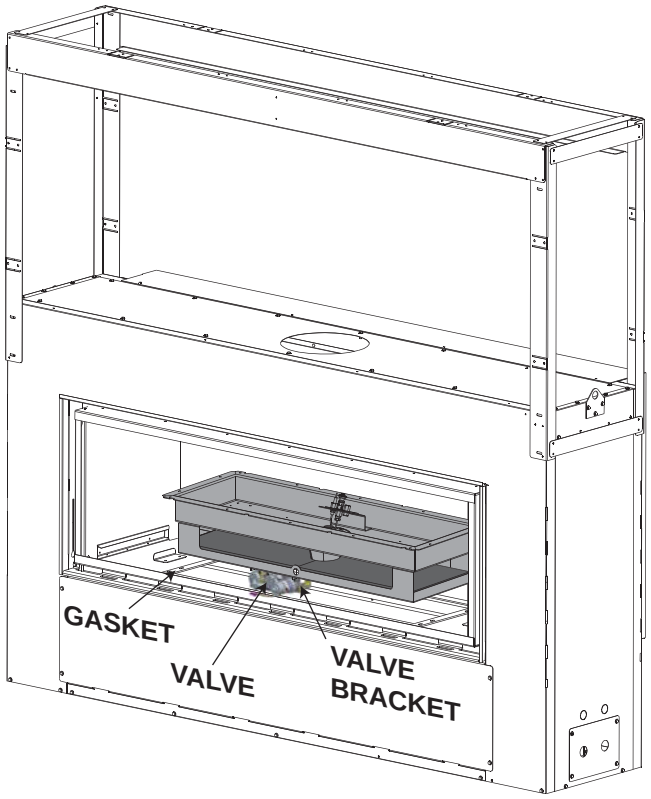

11.4 BURNER REMOVAL

A. Remove the bevelled trim, glass door, porcelain wrap and porcelain side panels, see “FINISHING” section.

B. Remove the media tray by using the finger holes and lifting the tray up and out.
<u>HELPFUL HINT:</u> Prior to removing the media tray, carefully remove crystals and clean before reinstalling, see “MEDIA INSTALLATION” section.

C. Remove the 8 screws that secure the burner in place. Lift the burner up and out.

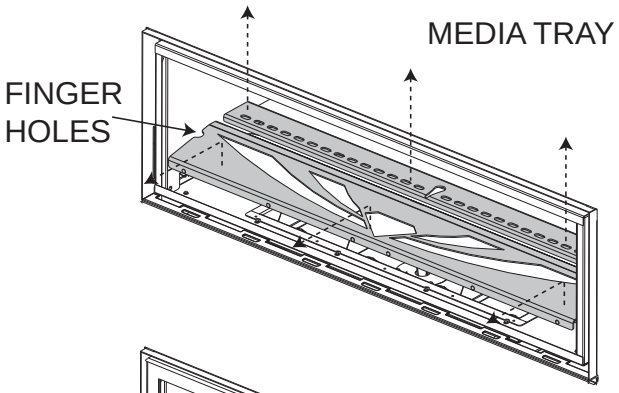

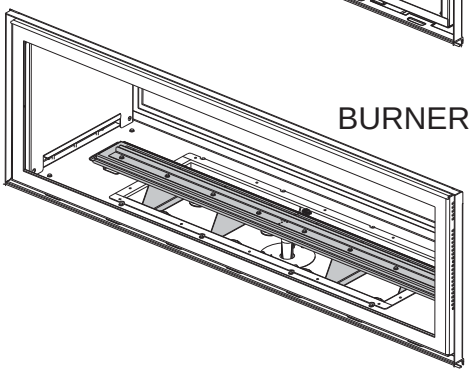

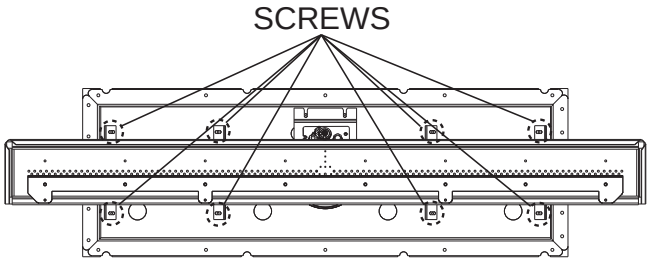

11.5 CONTROL MODULE REMOVAL

A. Remove the valve train assembly and set aside, see “VALVE TRAIN ASSEMBLY” section. Disconnect the wires to the control module, labeling one end to aid with their re-connection.

B. Remove the 4 screws holding the control module shield in place.

C. Remove the 2 screws holding the control module in place, unplug and remove.

D. Replace and reinstall components.

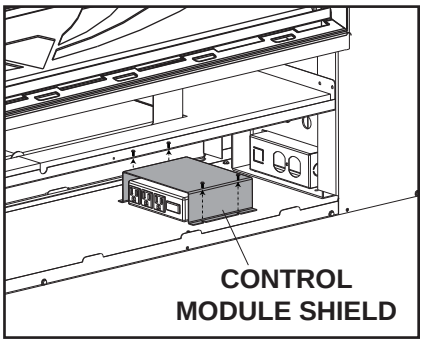

<u>NOTE:</u> Control module ON/OFF switch should always be in the “ON” position. If for any reason the module is turned “OFF”, the components plugged into the module won’t have power.

11.6 IPI BOARD AND AC ADAPTOR ACCESS

A. Remove the valve train assembly and set aside, see “VALVE TRAIN ASSEMBLY” section. Disconnect the wires to the control IPI Board and/or the AC Adaptor, see CONTROL ACCESS” section for components locations.

Label one end of each wire to aid with their re-connection.

Components are held in place with velcro. Pull off and replace components as required.

11.7 LAMP REPLACEMENT

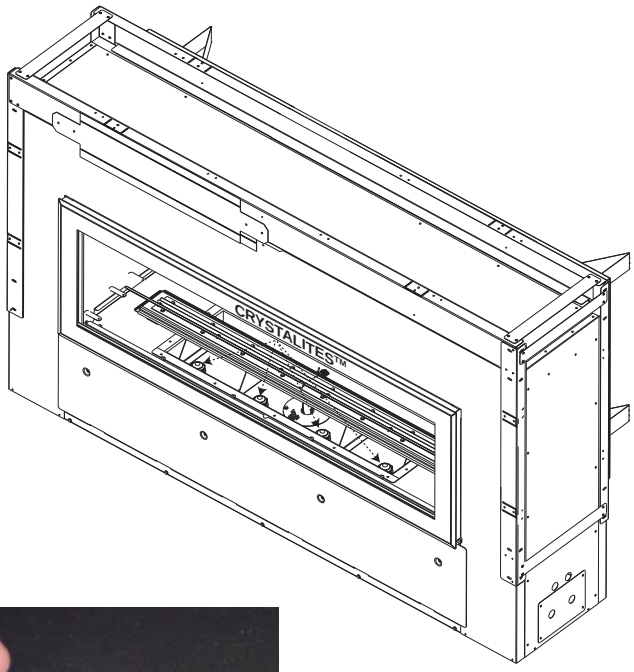

This appliance comes equipped with our “Crystalites™”. If in the event the lamp needs to be replaced, follow these instructions.

A. Turn off all electrical supply.

B. Remove the glass door and media tray from the firebox, see “DOOR REMOVAL / INSTALLATION” and “BURNER REMOVAL” section.

C. Unscrew the lens cover and lift the lamp straight out. Replace with Wolf Steel Ltd. parts only (W387-0009).

D. **<u>NOTE:</u> Do not handle the lamp with bare fingers, protect with a clean dry cloth.**

E. Replace lens cover.

F. Replace glass door and media tray.

11.8 LENS ASSEMBLY REPLACEMENT

⚠ WARNING

THE FRONT OF THE APPLIANCE BECOMES VERY HOT DURING OPERATION. LET THE APPLIANCE COOL COMPLETELY BEFORE CONDUCTING SERVICE.

A. Remove the glass and glass ember tray.

B. Remove the burner base from the firebox.

C. Compress the retainer fins and lift out the lens assembly. Disconnect the wires.

D. Replace lens assembly by aligning key hole and snap into place. Re-connect the wires.

E. Re-install burner base ensuring a good firebox seal.

F. Re-install glass ember tray and glass.

<u>NOTE:</u> When removing the glass ember tray make sure the glass embers are away from the center of the screen, exposing the burner, before lifting glass ember tray out.

When replacing burner, absolutely no glass embers can be in cup surrounding the orifice. **<u>HINT:</u> If glass falls into cup and surrounds the orifice, insert a clean bag into a vacuum cleaner and vacuum out glass embers. Replacement glass embers can be ordered from Wolf Steel Ltd.**

11.9 PORCELAIN WRAP REMOVAL

A. Remove the two screws on either top side of the porcelain wrap.

B. Tip the wrap forwards and lift out.

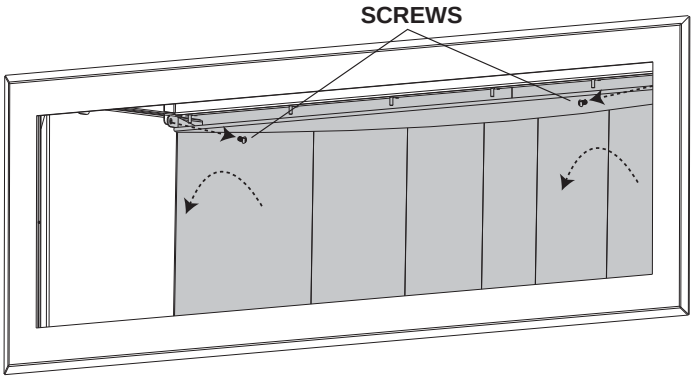

11.10 DOOR LATCH REPLACEMENT

A. Remove Media Tray, see “BURNER REMOVAL” section.
NOTE: For One Side appliance, the porcelain wrap must be removed prior to media tray.

B. Remove the porcelain side panels by lifting them from the bottom and sliding them out from the tabs as illustrated.

C. Remove the 4 bolts and replace the latch assembly. Adjust the tension of the latches to ensure proper door seal.
NOTE: Be careful not to tear the latch assembly gasket. Replacement gaskets can be ordered from your local authorized dealer / distributor.

D. Reinstall the porcelain side panels, the porcelain wrap (if applicable) and the media tray.

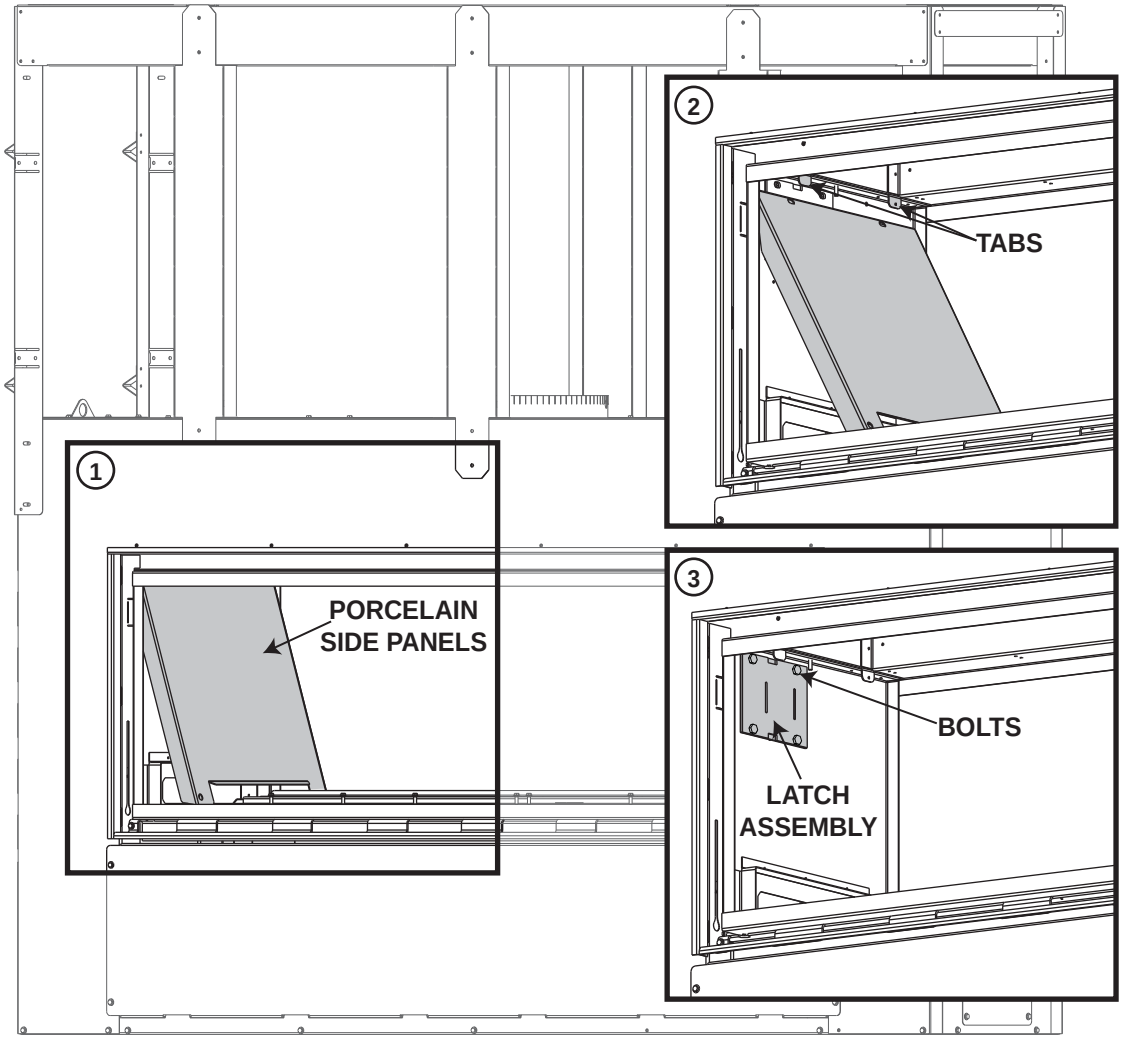

11.11 GLASS / DOOR REPLACEMENT

⚠ WARNING

DO NOT USE SUBSTITUTE MATERIALS.

GLASS MAY BE HOT, DO NOT TOUCH GLASS UNTIL COOLED.

CARE MUST BE TAKEN WHEN REMOVING AND DISPOSING OF ANY BROKEN DOOR GLASS OR DAMAGED COMPONENTS. BE SURE TO VACUUM UP ANY BROKEN GLASS FROM INSIDE THE APPLIANCE BEFORE OPERATION.

DO NOT STRIKE, SLAM OR SCRATCH GLASS. DO NOT OPERATE APPLIANCE WITH GLASS REMOVED, CRACKED, BROKEN OR SCRATCHED.

56.2

A. Place the door frame face down careful not to scratch the paint.

B. Ensure the glass retainers are bent up prior to replacing the glass and gasket.

C. Center the gasketed glass inside the door frame with the thick side of the gasket facing up.

D. Bend the glass retainers located along the edge of the door frame over the gasket holding the glass in place. Be careful not to break the glass.

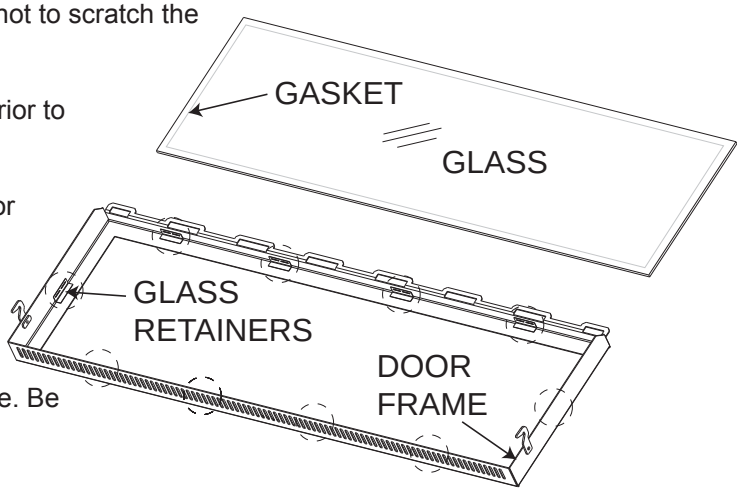

11.12 CARE OF GLASS

DO NOT CLEAN GLASS WHEN HOT! DO NOT USE ABRASIVE CLEANERS TO CLEAN GLASS.

Buff lightly with a clean dry soft cloth. Clean both sides of the glass after the first 10 hours of operation with a recommended fireplace glass cleaner. Thereafter clean as required. If the glass is not kept clean permanent discoloration and / or blemishes may result.

⚠ WARNING

HOT GLASS WILL CAUSE BURNS.

DO NOT TOUCH GLASS UNTIL COOLED.

NEVER ALLOW CHILDREN TO TOUCH GLASS.

5.1

11.13 CARE OF PLATED PARTS

If the appliance is equipped with plated parts, you must clean fingerprints or other marks from the plated surfaces before operating the appliance for the first time. Use a glass cleaner or vinegar and towel to clean. If not cleaned properly before operating for the first time, the marks can cause permanent blemishes on the plating. After the plating is cured, the fingerprints and oils will not affect the finish and little maintenance is required, just wipe clean as needed. Prolonged high temperature burning with the door ajar may cause discolouration on plated parts.

<u>NOTE:</u> The protective wrap on plated parts is best removed when the assembly is at room temperature but this can be improved if the assembly is warmed, using a hair dryer or similar heat source.

6.1

12.0 REPLACEMENTS

Contact your dealer or the factory for questions concerning prices and policies on replacement parts. Normally all parts can be ordered through your Authorized dealer / distributor.

FOR WARRANTY REPLACEMENT PARTS, A PHOTOCOPY OF THE ORIGINAL INVOICE WILL BE REQUIRED TO HONOUR THE CLAIM.

When ordering replacement parts always give the following information:

- Model & Serial Number of appliance
- Installation date of appliance
- Part number
- Description of part
- Finish

*** IDENTIFIES ITEMS WHICH ARE NOT ILLUSTRATED. FOR FURTHER INFORMATION, CONTACT YOUR AUTHORIZED DEALER.**

WARNING

FAILURE TO POSITION THE PARTS IN ACCORDANCE WITH THIS MANUAL OR FAILURE TO USE ONLY PARTS SPECIFICALLY APPROVED WITH THIS APPLIANCE MAY RESULT IN PROPERTY DAMAGE OR PERSONAL INJURY.

41.1

COMPONENTS		
REF NO.	**PART NO.**	**DESCRIPTION**
1	W010-2084	DOOR LATCH ASSEMBLY
2	W725-0056	NATURAL GAS MODULATING ELEC. VALVE
2	W725-0057	PROPANE GAS MODULATING ELEC. VALVE
3	W010-2107	FIRESTOP SPACER ASSEMBLY
4	W010-2210	MAIN DOOR ASSEMBLY (OPERATING)
5*	W010-2213	MAIN DOOR (FIXED)
6*	W010-2225	ASSEMBLY, REPLACEMENT GLASS AND GASKET
7*	W720-0062	PILOT TUBE
8*	W190-0029	IPI IGNITION BOARD
9	W660-0086	SWITCH, FAN CONTROL
10	W660-0085	S-RECEIVER
11*	W707-00011	TRANSFORMER (ONE SIDED)
11*	W707-0012	TRANSFORMER (TWO SIDED)
12	W660-0071	REMOTE TRANSMITTER
13*	W750-0220	WIRE HARNESS GTMFS
14	W365-0002PC	KEY, LATCH
15*	W290-0135	GASKET, DOOR LATCH
16*	W750-0214	WIRE, 12” GROUND
17*	W750-0192	WIRE, HARNESS IPI BOARD
18*	W500-0491	RESTRICTOR PLATE
19	W010-1865	PILOT ASSEMBLY NG
19	W010-1866	PILOT ASSEMBLY LP
20	W456-0038	#38 NATURAL GAS ORIFICE
20	W456-0053	#53 PROPANE ORIFICE
21	W455-0069	PILOT INJECTOR NG
21	W455-0068	PILOT INJECTOR LP
22	W750-0201	ELECTRODE
23	W750-0200	FLAME SENSOR
24	W010-2185	MEDIA TRAY, FRONT
25	W010-2186	MEDIA TRAY, REAR (TWO SIDED)
26	W010-2199K	TRAY, REAR (ONE SIDED)
27	W010-2188	PORCELAIN WRAP (ONE SIDED)
28	W010-2187C	CHROME BEVELLED TRIM
29*	W387-0013	LAMP, 10 WATT 12 VOLT
30*	W280-0166	FRAME, HEADER

NOTE: Care must be taken when removing and disposing of any broken glass or damaged components. Be sure to vacuum up any broken glass from inside the appliance before operation.

HORIZONTAL TERMINAL KIT		
REF NO.	**PART NO.**	**DESCRIPTION**
31*	GD422R-1	ROUND WALL TERMINAL KIT

ROOF TERMINAL KITS		
REF NO.	**PART NO.**	**DESCRIPTION**
32*	GD410	1/12 TO 7/12 PITCH
33*	GD411	8/12 TO 12/12 PITCH
34*	GD412	FLAT ROOF
35*	W490-0074	5/8 INNER OUTER SLEEVE
36	W670-0007	5/8 AIR TERMINAL
37	W170-0086	STORM COLLAR
38	W010-0453	ROOF SUPPORT
39	W263-0065	ROOF FLASHING - FLAT
	W263-0066	ROOF FLASHING 1/12 - 7/12 PITCH
	W263-0055	ROOF FLASHING 8/12 - 12/12 PITCH

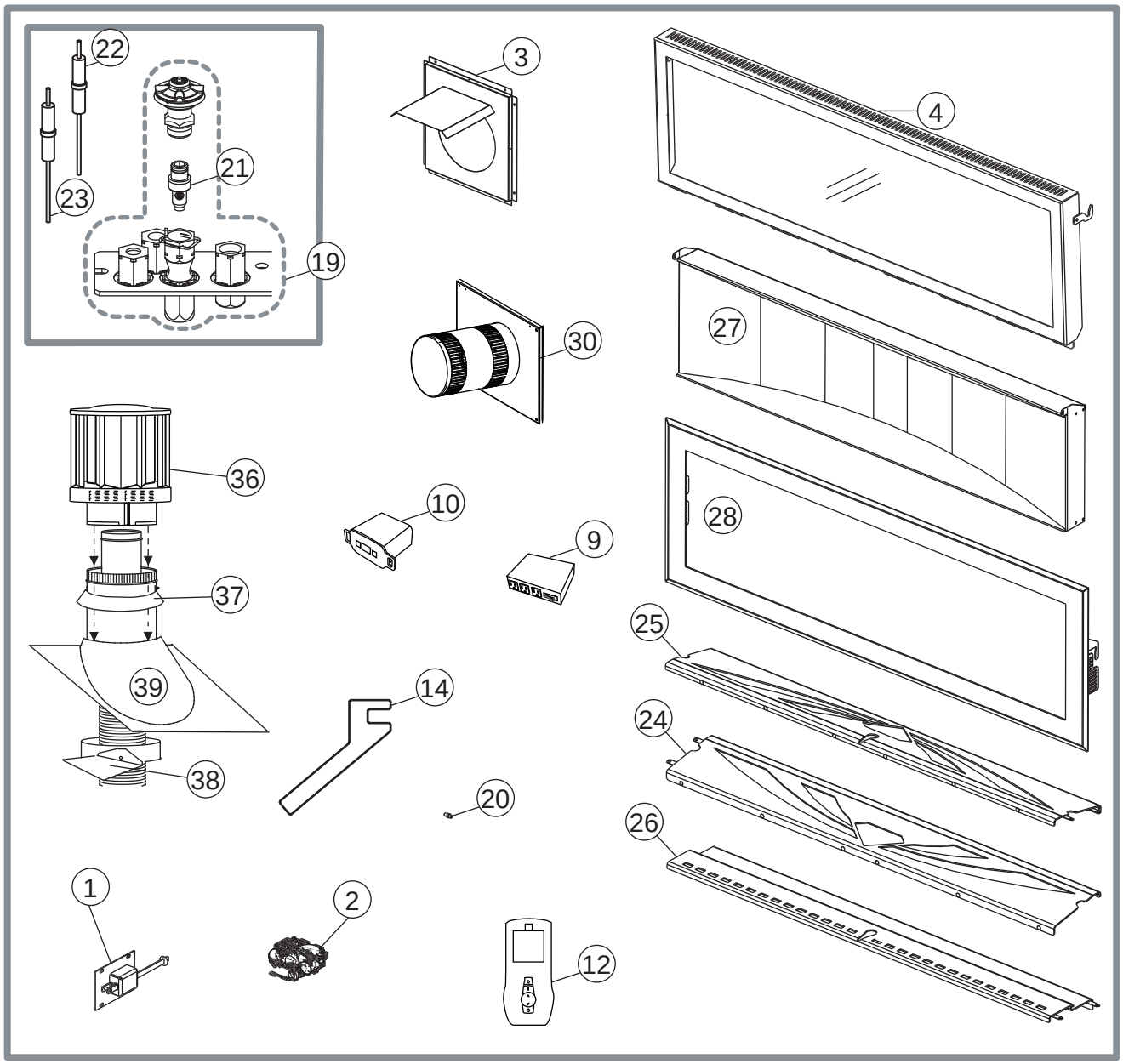

ACCESSORIES		
REF NO.	**PART NO.**	**DESCRIPTION**
1*	W573-0007	HI-TEMP SEALANT
2	GD-501	HEAT GUARD
3*	W010-0370	WALL SUPPORT ASSEMBLY
4*	W175-0196	COUPLER KIT 5/8
5	W585-0092	VENT PIPE SHIELD
6	LHDSW50	SURROUND - WHITE
6	LHDSP50	SURROUND - PEWTER
6	LHDSK50	SURROUND - BLACK
7	GPV	SEE LOCAL AUTHORIZED DEALER / DISTRIBUTOR
8	LHA	SHIPPING HANDLES
9	W170-0086	VENT PIPE COLLAR
10*	W500-0028	FIRESTOP SPACER
11*	W175-0316	CONVERSION KIT LP - NG
11*	W175-0317	CONVERSION KIT NG - LP
12*	PVAL50	ADAPTOR KIT

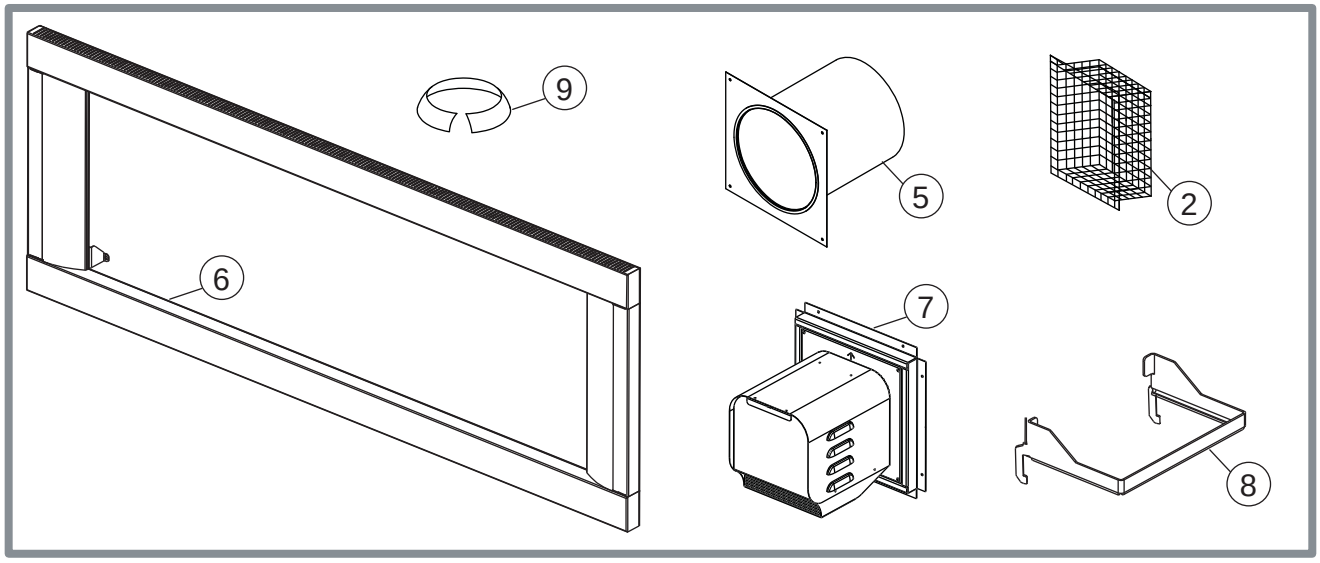

13.0 TROUBLESHOOTING

⚠ WARNING

ALWAYS LIGHT THE PILOT WHETHER FOR THE FIRST TIME OR IF THE GAS SUPPLY HAS RAN OUT, WITH THE GLASS DOOR OPEN OR REMOVED.

TURN OFF THE GAS AND ELECTRICAL POWER BEFORE SERVICING THE APPLIANCE.

APPLIANCE MAY BE HOT, DO NOT SERVICE UNTIL APPLIANCE HAS COOLED.

DO NOT USE ABRASIVE CLEANERS.

SYMPTOM	PROBLEM	TEST SOLUTION
Remote controls Crystalite / Night light but no spark or flame.	Remote is locked out.	- Reset by turning power source off then on. **<u>NOTE:</u> If back up batteries are installed, they must also be removed to re-program.**
Main burner flame is a blue, lazy, transparent flame.	Blockage in vent.	- Remove blockage. In really cold conditions, ice buildup may occur on the terminal and should be removed as required. To minimize this from happening again, it is recommended that the vent lengths that pass through unheated spaces (attics, garages, crawl spaces) be wrapped with an insulated mylar sleeve. Prevent sleeve from sagging. Contact your local authorized dealer for more information.
	Incorrect installation.	- Refer to “VENTING” section to ensure correct location of storm collars.
Flames are consistently too large or too small. Carboning occurs. 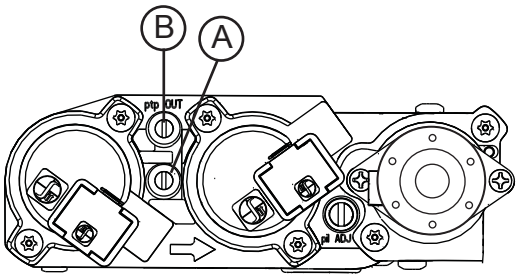	Appliance is over-fired or underfired.	- **Check pressure readings:** *Inlet pressure* can be checked by turning screw (A) counter-clockwise 2 or 3 turns and then placing pressure gauge tubing over the test point. Gauge should read 7” (minimum 4.5”) water column for natural gas or 13” (minimum 11”) water column for propane. Check that main burner is operating on ‘HI’. *Outlet pressure* can be checked the same as above using screw (B). Gauge should read 3.5” water column for natural gas or 10” water column for propane. Check that main burner is operating on ‘HI’. **AFTER TAKING PRESSURE READINGS, BE SURE TO TURN SCREWS CLOCKWISE FIRMLY TO RESEAL. DO NOT OVER TORQUE.** Leak test with a soap and water solution.
Carbon is being deposited on glass, logs, rocks, media or combustion chamber surfaces.	Air shutter has become blocked.	- Ensure air shutter opening is free of lint or other obstructions.
	Flame is impinging on the glass, logs, rocks, media or combustion chamber.	- Check that the glass, logs, rocks, media are correctly positioned. - Open air shutter to increase the primary air. - Check the input rate: check the manifold pressure and orifice size as specified by the rating plate. - Check that the door gasketing is not broken or missing and that the seal is tight. - Check that both vent liners are free of holes and well sealed at all joints. - Check that minimum rise per foot has been adhered to for any horizontal venting.
White / grey film forms.	Sulphur from fuel is being deposited on glass, logs or combustion chamber surfaces.	- Clean the glass with a recommended gas fireplace glass cleaner. DO NOT CLEAN GLASS WHEN HOT. - If deposits are not cleaned off regularly, the glass may become permanently marked.

SYMPTOM	PROBLEM	TEST SOLUTION
Exhaust fumes smelled in room, headaches.	Appliance is spilling.	- Ensure exhaust bracket gasket seal. - Check door seal. - Check for exhaust blockage. - Check that venting is installed correctly. - Room is in negative pressure; increase fresh air supply.
Pilot will not light. Makes noise with no spark at pilot burner.	Wiring.	- Verify the wire for the sensor and the wire for the ignitor are connected to the correct terminals (not reverse) on the module and pilot assembly.
	Loose connection.	- Verify no loose connections, electrical shorts in the wiring or ground out to any metal object.
	Igniter Spark gap is incorrect.	- Spark gap of the ignitor to the pilot should be .125” (1/8”).
Pilot will not light. Makes no noise with no spark at pilot burner. Crystalites™ and (optional) blower operates.	A shorted or loose connection.	- Remove and reinstall the wiring harness that plugs into the module. - Remove and verify continuity of each wire in the wiring harness.
	Module is not grounded.	- Verify the valve and pilot assemblies are properly grounded to the metal chassis of the fireplace.
	Ignition box has been locked out.	Choose one of the 4 methods below to reset the system. **1.** To reset ignition box when locked out. Turn off power supply and remove batteries (if used) from the receiver. **2.** To reset the DFC Board when the board goes into a lock out condition and the LED is blinking 3 times using the transmitter ON/OFF button: **Step 1:** Turn the system off by pressing the ON/OFF button to turn the system off. **Step 2:** After approximately 2 seconds press the ON/OFF button on the transmitter again. THE DFC Board will reset and the ignition sequence will start again. **3.** To reset the DFC Board when the board goes into a lock out condition and the LED is blinking 3 times by cycling flame: **Step 1:** In the manual flame control mode, use the down arrow button to reduce the flame to off, indicated by the word OFF displayed on the trasmitter LCD screen. **Step 2:** Wait approximately 2 seconds and press the up arrow button, the ignition sequence will start. **4.** To reset the DFC Board when the board goes into a lock out condition and the LED is blinking 3 times using the receiver switch. **Step 1:** With the transmitter off, move the slider switch on the receiver to the OFF position. **Step 2:** Wait approximately 2 seconds and move the receiver slider switch to the ON position. The ignition sequence will start again.
	NOTE: Starting from OFF, press the ON button on the transmitter. Approximately 4 seconds after the ON/OFF button is pressed the ignition board will start the spark. The first try for ignition will last approximately 60 seconds. If there is no flame ignition (rectification) the board will stop sparking for approximately 35 seconds. After the wait time the board will start the second try for ignition by sparking for approximately 60 seconds. If there is still no positive ignition, the board will go into lock out.	

42.1_2

SYMPTOM	PROBLEM		TEST SOLUTION
Pilot sparks but will not light.	Gas supply.	-	Verify that the incoming gas line ball valve is “Open”.
		-	Verify that the inlet pressure reading is within acceptable limits, inlet pressures must not exceed 14” W.C.
	Module is not grounded.	-	Verify the value and pilot assemblies are properly grounded to the metal chassis of the fireplace.
	Out of propane gas.	-	Fill the tank.
Continues to spark and pilot lights, but main burner will not light.	Short or loose connection in sensor rod.		Verify all connections. Verify the connections from the pilot assembly are tight; also verify these connections are not grounding out to any metal.
	Poor flame rectification or contaminated sensor rod.	-	Verify the flame is engulfing the sensor rod. This will increase the flame rectification. Verify correct pilot orifice is installed and inlet gas specifications to manual. (Remember, the flame carries the rectification current, not the gas. If the flame lifts from pilot hood, the circuit is broken. A wrong orifice or too high of an inlet pressure can cause the pilot flame to lift.) The sensor rod may need cleaning.
	Poor grounding between pilot assembly and gas valve.	-	Verify that the wire harness is firmly connected to module.
	Damaged pilot or dirty sensor rod.	-	Verify that the ceramic insulator around the sensor rod is not cracked, damaged, or loose. Verify the connection from the sensor rod to the sensor wire. Clean sensor rod with an emery cloth to remove any contamination that may have accumulated on the sensor rod. Verify continuity with multimeter with ohms set at the lowest range.
Appliance won’t perform any functions.	Receiver switch is in the wrong position.	-	Verify that the 3 position switch on the receiver is in the “REMOTE” position (middle).
	No power to the system.	-	Check breaker to verify it’s in the “ON” position.
	Transmitter isn’t operational.	-	Check battery power and battery orientation.
Night light or (optional) blower won’t function	Control module switch is in the wrong position.	-	Verify ON/OFF switch is in the “I” position which denotes on.
	COM switch is unplugged.	-	Verify “COM” switch is plugged into the front of the control module.

42.1_3

14.0 WARRANTY

NAPOLEON® products are manufactured under the strict Standard of the world recognized ISO 9001 : 2008 Quality Assurance Certificate.

NAPOLEON® products are designed with superior components and materials assembled by trained craftsmen who take great pride in their work. The burner and valve assembly are leak and test-fired at a quality test station. The complete appliance is again thoroughly inspected by a qualified technician before packaging to ensure that you, the customer, receives the quality product that you expect from NAPOLEON®.

NAPOLEON® GAS APPLIANCE PRESIDENT'S LIFETIME LIMITED WARRANTY

The following materials and workmanship in your new NAPOLEON® gas appliance are warranted against defects for as long as you own the appliance. This covers: combustion chamber, heat exchanger, stainless steel burner, phazer™ logs and embers, rocks, ceramic glass (thermal breakage only), gold plated parts against tarnishing, porcelainized enameled components and aluminum extrusion trims.*

Electrical (110V and millivolt) components and wearable parts such as blowers, gas valves, thermal switch, switches, wiring, remote controls, ignitor, gasketing, and pilot assembly are covered and NAPOLEON® will provide replacement parts free of charge during the first year of the limited warranty.*

Labour related to warranty repair is covered free of charge during the first year. Repair work, however, requires the prior approval of an authorized company official. Labour costs to the account of NAPOLEON® are based on a predetermined rate schedule and any repair work must be done through an authorized NAPOLEON® dealer.

* Construction of models vary. Warranty applies only to components included with your specific appliance.

CONDITIONS AND LIMITATIONS

NAPOLEON® warrants its products against manufacturing defects to the original purchaser only. Registering your warranty is not necessary. Simply provide your proof of purchase along with the model and serial number to make a warranty claim. NAPOLEON® reserves the right to have its representative inspect any product or part thereof prior to honouring any warranty claim. Provided that the purchase was made through an authorized NAPOLEON® dealer your appliance is subject to the following conditions and limitations:

Warranty coverage begins on the date of original installation.

This factory warranty is non-transferable and may not be extended whatsoever by any of our representatives.

The gas appliance must be installed by a licensed, authorized service technician or contractor. Installation must be done in accordance with the installation instructions included with the product and all local and national building and fire codes.

This limited warranty does not cover damages caused by misuse, lack of maintenance, accident, alterations, abuse or neglect and parts installed from other manufacturers will nullify this warranty.

This limited warranty further does not cover any scratches, dents, corrosion or discoloring caused by excessive heat, abrasive and chemical cleaners nor chipping on porcelain enamel parts, mechanical breakage of PHAZER™ logs and embers.

This warranty extends to the repair or replacement of warranted parts which are defective in material or workmanship provided that the product has been operated in accordance with the operation instructions and under normal conditions.

After the first year, with respect to this President's Lifetime Limited Warranty, NAPOLEON® may, at its discretion, fully discharge all obligations with respect to this warranty by refunding to the original warranted purchaser the wholesale price of any warranted but defective part(s).

NAPOLEON® will not be responsible for installation, labour or any other expenses related to the reinstallation of a warranted part and such expenses are not covered by this warranty.

Notwithstanding any provisions contained in the President's Lifetime Limited Warranty, NAPOLEON'S responsibility under this warranty is defined as above and it shall not in any event extend to any incidental, consequential or indirect damages.

This warranty defines the obligations and liability of NAPOLEON® with respect to the NAPOLEON® gas appliance and any other warranties expressed or implied with respect to this product, its components or accessories are excluded.

NAPOLEON® neither assumes, nor authorizes any third party to assume, on its behalf, any other liabilities with respect to the sale of this product.

NAPOLEON® will not be responsible for: over-firing, downdrafts, spillage caused by environmental conditions such as rooftops, buildings, nearby trees, hills, mountains, inadequate vents or ventilation, excessive venting configurations, insufficient makeup air, or negative air pressures which may or may not be caused by mechanical systems such as exhaust fans, furnaces, clothes dryers, etc.

Any damages to the appliance, combustion chamber, heat exchanger, plated trim or other components due to water, weather damage, long periods of dampness, condensation, damaging chemicals or cleaners will not be the responsibility of NAPOLEON®.

All parts replaced under the President's Limited Lifetime Warranty Policy are subject to a single claim.

During the first 10 years NAPOLEON® will replace or repair the defective parts covered by the lifetime warranty at our discretion free of charge. From 10 years to life, NAPOLEON® will provide replacement parts at 50% of the current retail price.

All parts replaced under the warranty will be covered for a period of 90 days from the date of their installation.

The manufacturer may require that defective parts or products be returned or that digital pictures be provided to support the claim. Returned products are to be shipped prepaid to the manufacturer for investigation. If a product is found to be defective, the manufacturer will repair or replace such defect.

Before shipping your appliance or defective components, your dealer must obtain an authorization number. Any merchandise shipped without authorization will be refused and returned to sender.

Shipping costs are not covered under this warranty.

Additional service fees may apply if you are seeking warranty service from a dealer.

Warranty labour allowance is only for the replacement of the warranted part. Travel, diagnostic tests, shipping and other related charges are not covered by this warranty.

ALL SPECIFICATIONS AND DESIGNS ARE SUBJECT TO CHANGE WITHOUT PRIOR NOTICE DUE TO ON-GOING PRODUCT IMPROVEMENTS. NAPOLEON® IS A REGISTERED TRADEMARK OF WOLF STEEL LTD.

2.1B

15.0 SERVICE HISTORY

Appliance Service History

This heater must be serviced annually depending on usage.

Date	Dealer Name	Service Technician Name	Service Performed	Special Concerns

14.0 NOTES