Owners Manual
for

Royal 900
Royal 720

Revised November 2011

Manufactured by:
Milan Blagojevic AD
Djure Strugara 20
11300 Smederevo
Serbia
www.mbs.rs

Imported by:
Sopka Inc
4181 Plymouth Road
Cleveland, OH 44109
USA
www.sopkainc.com

Listed: UL 1482, ULC-S627 *Solid Fuel Room Heater*

PLEASE READ ALL INSTRUCTIONS BEFORE YOU INSTALL YOUR NEW STOVE. FAILURE TO FOLLOW INSTRUCTIONS MAY RESULT IN PROPERTY DAMAGE, BODILY INJURY, OR EVEN DEATH.

SAFETY NOTICE: FOR YOUR SAFETY, CONTACT LOCAL BUILDING OR FIRE OFFICIAL ABOUT PERMITS, RESTRICTIONS, AND INSTALLATION REQUIREMENTS FOR YOUR AREA. PLEASE CHECK WITH YOUR INSURANCE BEFORE USING IN YOUR HOME. USE PROFESSIONAL INSTALLER.

C A U T I O N
Hot while in operation– do not touch
Contact may cause skin burns
Keep children and clothing away
Keep furnishing and other combustible materials
a considerable distance away from stove.

Do not overfire. If stove or chimney connector glows, you are overfiring

DO NOT INSTALL IN MOBILE HOME OR TRAILER

SAFETY INSTRUCTIONS

Read all instructions carefully.

1. The installation of this stove must comply with your local building codes. Please observe the clearance to combustible. Stove must be 18”(46 cm) from any combustible material, wall, wood, furniture, paper, etc. Note: Drywall faced with bricks or stone should be consider a combustible surface.
2. Always connect this stove to a chimney and vent outside. This stove requires approved masonry or factory build 6” diameter UL 103 Type HT chimney, that is high enough to give good draft.
3. Do NOT connect this stove to a chimney flue serving another appliance.
4. Be sure that your chimney is safely constructed and in good repair. Have chimney inspected by the fire department or a qualified inspector.
5. Creosote or soot may build up in the chimney connector and chimney and may cause a house or building fire. Inspect the chimney connector and chimney twice monthly during the heating season and clean if necessary.
6. Burning any kind of fuel uses oxygen from the dwelling. Provide fresh air for proper combustion from outside the house into the room where the stove is located.
7. To prevent injury, do NOT allow anyone to use this stove who is unfamiliar with the correct operation of the stove. Do not operate stove while under the influence of drugs or alcohol.
8. Flue connector pipe should be 6” diameter, minimum single wall 24 msg black or 25 msg blued steel. (Listed to UL 103, Type HT and evaluated to CAN/ULC-S629-M87)
9. Do Not overfire. The special paint used on stove may give off some smoke and an odor while they are curing during first few fires. Open windows and doors as needed to clear smoke and odor. Overfiring may cause some damage to the stove.
10. Use only dry, seasoned, natural untreated wood. Do not burn garbage or flammable fluids, such as gasoline, naphtha, kerosene or engine oil.
11. Use the metal ash drawer only to dispose of ashes. Dispose of ashes in a metal container with a tight fitting lid. Keep the closed container on a non-combustible floor, well away from all combustible materials. Keep ashes in the closed container until all cinders have thoroughly cooled. The ashes may be buried in the ground or picked up by a refuse collector.
12. CAUTION: Hot while in operation. All person, especially young children should be alerted and trained to stay a safe distance from the stove. Small children should be all the time carefully supervised when they are in the same room with the stove.
13. This stove requires non-combustible floor protection.
14. Keep stove area clear and free from all combustible materials such as gasoline and/or other flammable vapors and liquids at minimum 36”.
15. Never leave an unattended woodstove burning on high.
16. It is highly recommended to install smoke and carbon monoxide detectors in the home when installing a wood stove.

SAVE THESE INSTRUCTIONS

INSTALLATION INSTRUCTION

CAUTION: STOVE IS HEAVY. MAKE SURE YOU HAVE ADEQUATE HELP AND USE PROPER LIFTING TECHNIQUES WHENEVER MOVING STOVE.

1. Proper clearances must be maintained for adequate air circulation. Adequate ventilation must be provided while operating this stove.
2. The stove must be placed on solid masonry, solid concrete, or when installing on combustible floor, on a UL 1618 listed floor protector. The base must extend at least 18” (46 cm) beyond the front of the stove and 8”(20 cm) to the sides, and MUST extend under the stove pipe. (Check local building codes and fire protection ordinances.) Floor protector minimum size; Royal 900 is 51.5”W by 49.5”D (1308 mm X 1257 mm); Royal 720 is 44.5” W by 49.5”D (1130 mm X 1257 mm).
3. The stove must have its own flue. DO NOT CONNECT THIS UNIT TO A CHIMNEY SERVING OTHER APPLIANCES.
4. Connect flue collar to the stove and adapter . The crimped end of the stove pipe must be installed facing down to fit inside the adapter. Figure 1, page 13.
5. Use three (3) sheet metal screws at each joint of stove pipe and adapter to firmly hold stove pipe together. Use 6” round black/blue stove pipe (Listed to UL 103, Type HT and evaluated to CAN/ULC-S629-M87) NOT galvanized pipe. DO NOT CONNECT THIS STOVE TO ANY AIR DISTRIBUTUIN OR DUCT SYSTEM.
6. Slope any horizontal stove pipe upward toward the chimney at least 1/4 inch for each foot of horizontal run.
7. You must have at least 18” of clearance between any horizontal pipe and ceiling.
8. The stove pipe must NOT extend to far into the chimney flue.
9. It is recommended that no more than two (2) 90 degree bends be used in the stove pipe installation.
10. Connect to 6” inspected masonry chimney or 6” UL Type HT listed chimney.

A PROFESSIONAL, LICENSED HEATHING AND COOLING CONTRACTOR SHOULD BE CONSULTED IF YOU HAVE QUESTIONS REGARDING THE INSTALLATION OF THIS SOLID FUEL BURNING APPLIANCE.

MASONRY CHIMNEY

Before using an existing masonry chimney, clean the chimney, inspect the flue liner and make any repair needed to be sure it is safe to use.

If connector stove pipe must go through a combustible wall before entering the masonry chimney, consult a qualified mason or chimney dealer. The installation must conform to local fire codes, and NFPA 211.

Do NOT connect this stove into the same chimney flue as the fireplace or flue from another stove. If there is a cleanout opening in the base of the chimney, close it tightly.

UL LISTED CHIMNEY

Carefully follow chimney manufacturer’s instructions. Us only a UL 103 Type HT Listed Residential Type and Building Heating Appliance Chimney. The top of the chimney must be at least three (3) feet above the roof and be at least two (2) feet higher than any point of the roof within ten (10) feet.

Chimney connector systems and clearances

Chimney connector shall not pass through attic or roof space, closet or similar concealed space, or a floor, or ceiling. When passage through a wall, or partition of combustible is desired, the installation shall conform to CAN/CSA-B365, Installation Code for Solid-Fuel-Burning Appliances and Equipment:

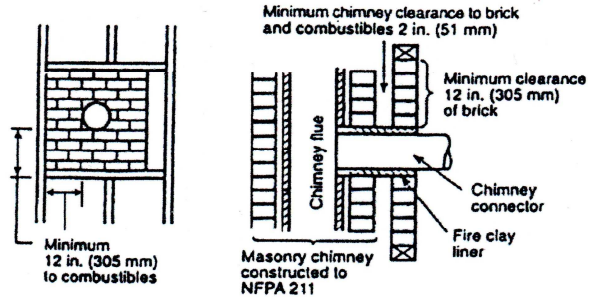

A. **Brick Masonry**

Minimum 3.5-inch thick brick masonry all framed into combustible wall with a minimum of 2-inch brick separation from clay liner to combustibles. The fireclay liner shall run from outer surface of brick wall to, but not beyond, the inner surface of chimney flue liner and shall be firmly cemented in place.

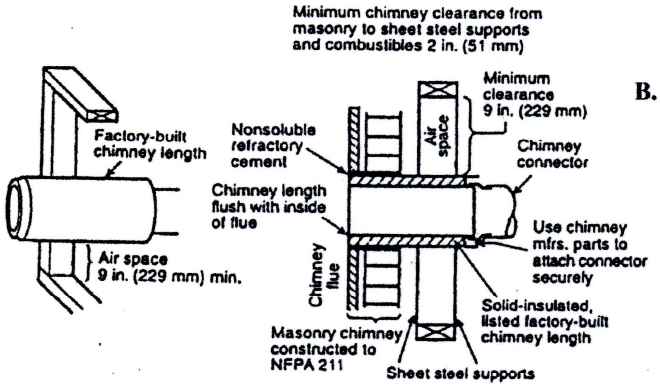

B. **Insulated Sleeve**

Solid-insulated, listed factory-built chimney length of the same inside diameter as the chimney connector and having 1-inch or more of insulation with a minimum 9-inch air space between the outer wall of the chimney length and combustibles.

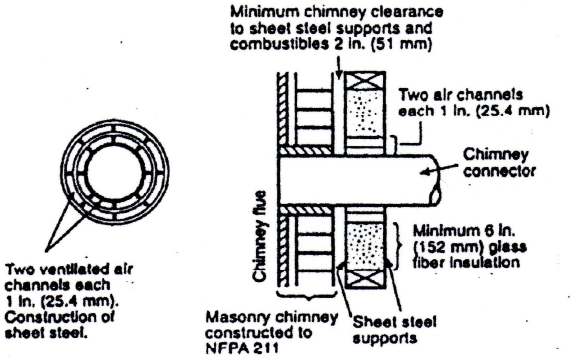

C. **Ventilated Thimble**

Sheet steel chimney connector, minimum 24 gauge in thickness, with a ventilated thimble, minimum 24 gauge in thickness, having two 1-inch air channels, separated from combustibles by a minimum of 6-inch of glass fiber insulation. Opening shall be covered, and thimble supported with a sheet steel support, minimum 24 gauge in thickness.

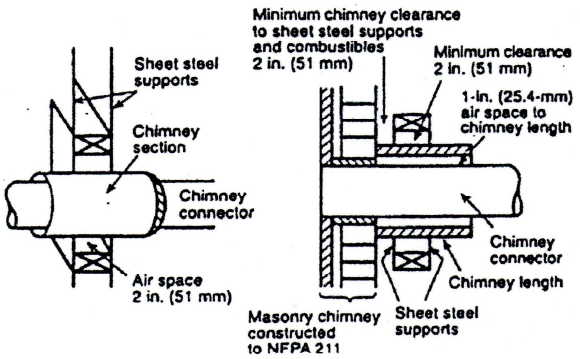

D. Chimney Section Pass-through

Solid insulated, listed factory-built chimney length with an inside diameter 2-inch larger than the chimney connector and having 1-inch or more of insulation, serving as a pass-through for a single wall sheet steel chimney connector of minimum 24 gauge thickness, with a minimum 2-inch air space between the outer wall of chimney section and combustibles. Minimum length of chimney section shall be 12-inch chimney section spaced 1-inch away from connector using sheet steel support plates on both ends of chimney section. Opening shall be covered, and chimney section supported on both sides with sheet steel support securely fastened to wall surfaces of minimum 24 gauge thickness. Fasteners used to secure chimney section shall not penetrate chimney flue liner.

CHIMNEY CONNECTOR
CLEARANCE TO COMBUSTIBLES

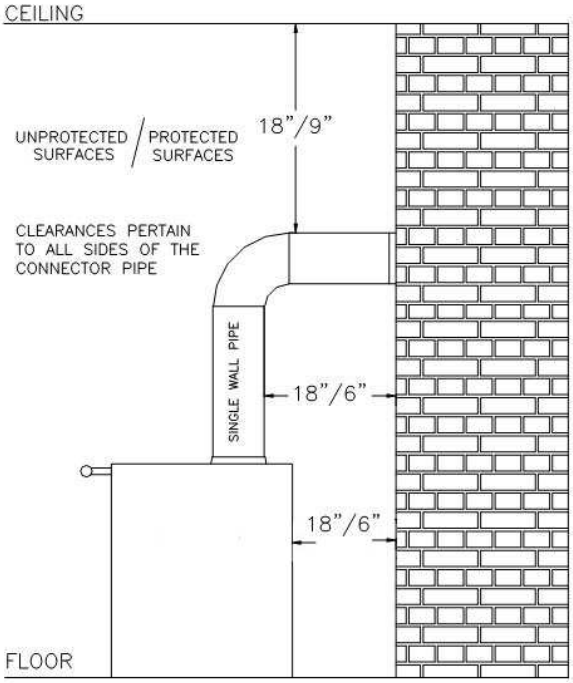

SINGLE WALL CONNECTOR

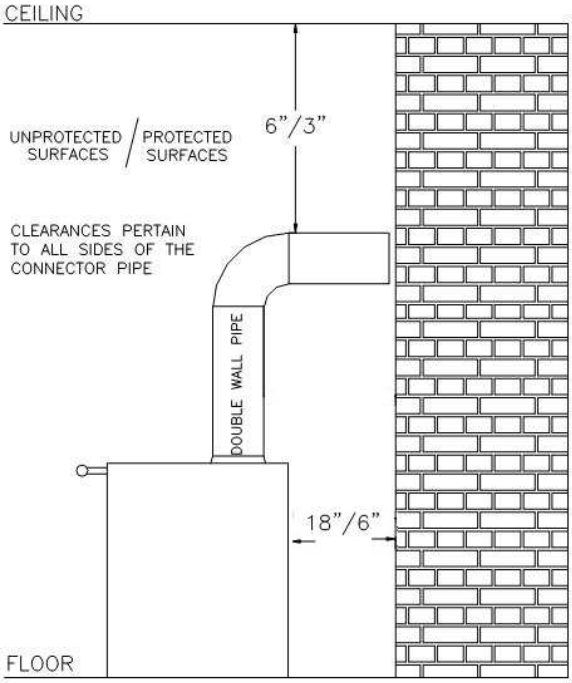

DOUBLE WALL CONNECTOR

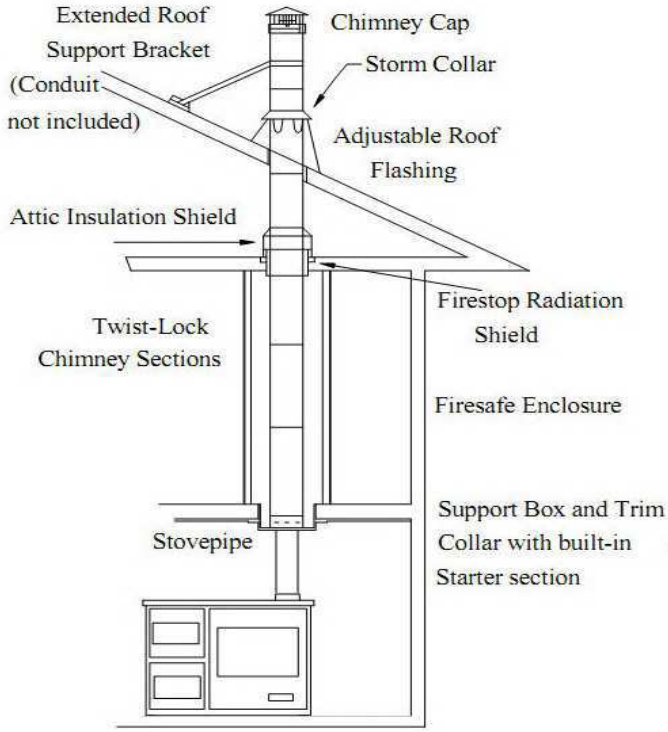

Two story house installation with attic.

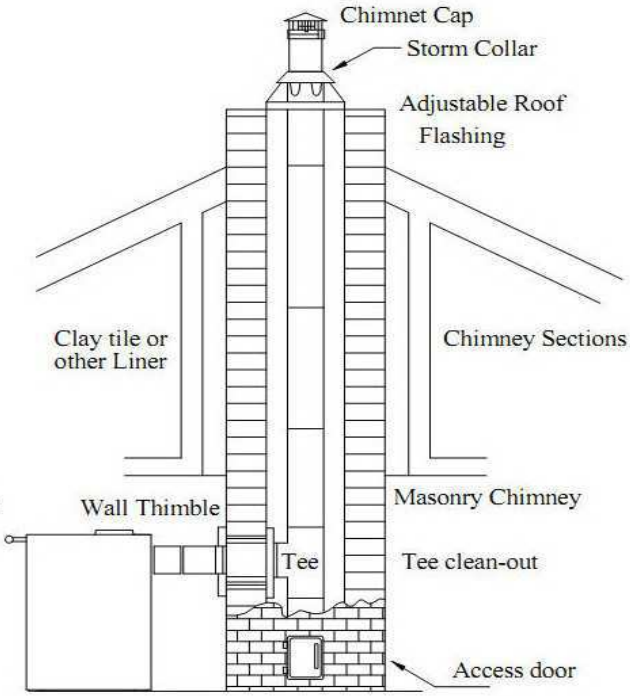

Chimney pipe through Clay tile
or other Lined Masonry Chimney

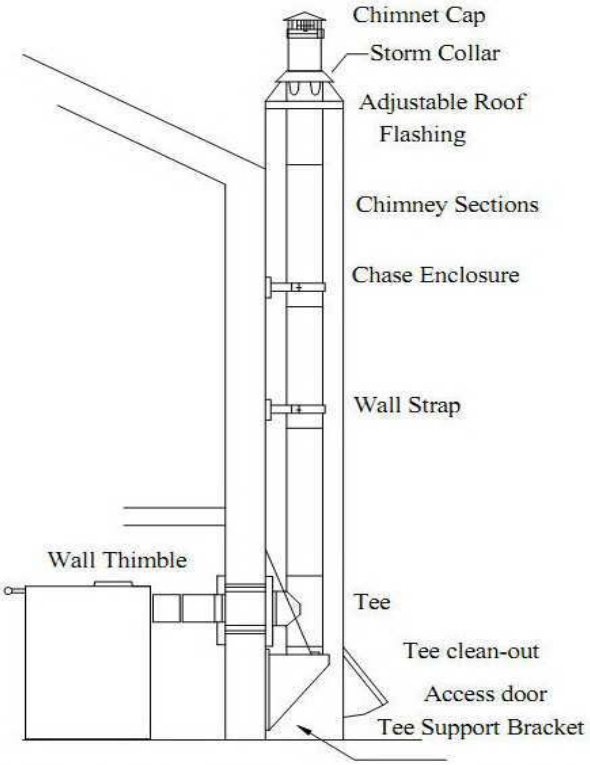

Chimney through outer wall with enclosed chase.
Chimney is supported by Tee Support Bracket.

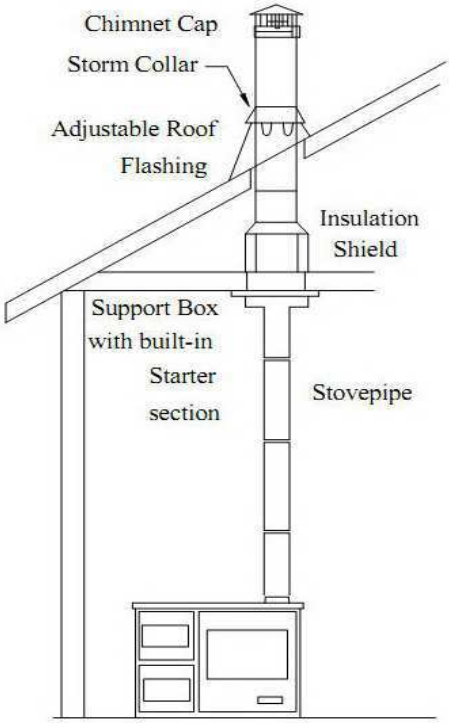

One story house installation with attic.
Chimney is supported by Ceiling.

MINIMUM CLEARANCES TO COMBUSTIBLE SURFACES

Unit to Sidewall	**18" (46 cm)**
Unit to Backwall	**18" (46 cm)**
Unit Corner to wall	**18"(46 cm)**
Pipe Connector to Ceiling	**18" (46 cm)**

NOTE: DRYWALL FACED WITH BRICK OR STONE SHOULD BE CONSIDER A COMBUSTIBLE SURFACE.

CAUTION: KEEP FURNISHING AND OTHER COMBUSTIBLE MATERIALS AWAY FROM THE STOVE.

Clearances may only be reduced by means approved by regulatory authority.

OPERATION OF THE STOVE

1. Burn wood or coal only. The wood should be natural, air dried (seasoned) for at least six (6) months. Before lighting open draft, located on front left or right side of stove. Light wood using paper, twigs, etc. For burning coal check your local and state codes. NEVER USE ANY FLAMMABLE LIQUIDS OR GASOLINE TO START OR FRESHEN UP A FIRE IN THE STOVE.
2. After the fire has been started, adjust the rate of burning by opening or closing the draft control.
3. Do NOT touch the stove after firing until is has cooled.
4. Never overfire this stove by building excessively hot fires.
5. If stove begins to glow or turn red, you are overfiring the stove.
6. Inspect stovepipe every 60 days. Replace immediately if stove pipe is rusting or leaking smoke.
7. Inspect the stove pipes, connectors, and chimney twice monthly during the heating season and clean if necessary.

CAUTION: SLOW BURNING FIRES AND EXTENDED USE MAY CAUSE EXCESSIVE CREOSOTE BUILDUP. IGNITION OF CREOSOTE/SOOT OR OVERFIRING MAY CAUSE CHIMNEY FIRE. CHIMNEY FIRES BURN EXTREMELY HOT AND MAY IGNITE SURROUNDING MATERIALS. IN CASE OF CHIMNEY FIRE CALL THE FIRE DEPARTMENT IMMEDIATELY.

CHIMNEY MAINTENANCE - Creosote/Soot Formation and Need for Removal

When wood is burned slowly, it produces tar and other organic vapors which combine with expelled moisture to form creosote. The creosote vapors condense in relatively cool chimney flue of a slow burning fire. As a result, creosote residue accumulates on the flue lining. When coal is burned , the products of combustion combine with moisture to form a soot residue which accumulates on the flue lining. When ignited, this soot/creosote makes an extremely hot fire.
The chimney and the chimney connector should be inspected <u>at least twice monthly.</u>
If creosote/soot has accumulated, it should be removed. Failure to remove creosote/soot may cause a house or building fire. Creosote/soot may be removed by using chimney brush.
Chimney fires burn very hot. If the chimney connector glows red, immediately call the fire department.

PROVIDE AIR INTO THE ROOM FOR PROPER COMBUSTION.

CAUTION: HOT WHILE IN OPERATION. KEEP CHILDREN, ANIMALS, CLOTHING AND FURNITURE AWAY FROM THE STOVE. DO NOT TOUCH HOT STOVE. CONTACT MAY CAUSE SKIN BURNS. TRAIN CHILDREN TO STAY A SAFE DISTANCE FROM THE UNIT. CHILDREN SHOULD BE ALL THE TIME CAREFULLY SUPERVISED WHEN THEY ARE IN THE SAME ROOM WITH THE STOVE.

CAUTION: NEVER USE CHEMICALS, GASOLINE, KEROSENE, CHARCOAL LIGHTER FLUID OR SIMILAR FLAMMABLE LIQUIDS TO START OR FRESHEN UP A FIRE IN THE STOVE.
KEEP ALL FLAMMEBLE LIQUIDS AWAY FROM THE STOVE-WHETER IN USE OR IN STORAGE.

OPERATING SAFETY PRECAUTIONS

1. **NEVER BUILD EXTREMELY LARGE FIRES IN THE STOVE AS DAMAGE TO THE STOVE OR SMOKE LEAKAGE MAY RESULT.**
2. **NEVER OVERFIRE THIS STOVE BY BUILDING EXCESSIVELY HOT FIRES AS A HOUSE OR BULDING FIRE MAY RESULT. YOU ARE OVERFIRING THE STOVE IF STOVE OR STOVE PIPE BEGINS TO GLOW OR TURN RED.**
3. **PROVIDE AIR INTO THE ROOM FOR PROPER COMBUSTION.**
4. **USE SOLID NATURAL AIR DRIED (SEASONED) WOOD and COAL, only.**
5. **INSPECT STOVE PIPES, CHIMNEY AND STOVE AT LEAST TWICE A MONTH AND CLEAN IF NECESSARY.**
6. **WHILE IN OPERATION, KEEP THE FEED DOOR CLOSED ALL THE TIME, EXCEPT WHILE TENDING THE FIRE. ALWAYS OPEN DRAFT CONTROLER BEFORE OPENING THE FEED DOOR.**

ABOUT DRAFT:

The principle of draft is that warm air rises. Your chimney provides draft which sucks the smoke up the chimney. The stove does NOT PUSH out the smoke. Your stove has been design and approved for use under normal conditions. Unacceptable smoking usually indicates poor draft in your chimney. Normal operating draft for this stove is 10 Pa - 12 Pa (0.04 w.c. - 0.05 w.c.). For draft above 15 Pa (0.06 w.c.) install a stovepipe damper. Gauges to measure draft are readily available at stove stores and are economical to rent or purchase.
Should you have a problem with inadequate draft, you should contact a licensed heating and cooling contractor for assistance in solving the problem.

PROBABLE CAUSES FOR SMOKING ARE:

Insufficient chimney height above nearby obstructions.
Clogged or obstructed chimney system
Downdraft caused by nearby trees, hills, buildings, etc.
Negative draft. In a cold chimney, a cold air column rushing down the chimney can prevent stove start-up causing the stove or chimney pipe joins to smoke. SOLUTION: Open nearby window, and use small strips of newspaper or tinder loosely placed in the firebox that will provide quick and hot heat up the chimney, thereby reversing draft.

Floor Protector Material Calculations

The stove must be placed on solid concrete, solid masonry, or when installed on a combustible floor, on minimum 3/8 inch non-combustible UL 1618 listed floor protector.
If those materials or UL 1618 listed floor protector are not available, materials with R-value of at least 0.8 may be substituted. Floor protector minimum size;
Royal 900 is 51.5" W by 49.5" D (1308mm X 1257mm); Royal 720 is 44.5" W by 49.5" D (1130 mm X 1257 mm).

Alternate materials may be rated with C-factor (Thermal Conductance) or k-factor (Thermal Conductivity) ratings which must be converted to R-value to determine if the alternate material meets the tested requirements. The following instructions provide the proper information and formulas for conversion to R-value.

To determine if alternate materials are acceptable follow this sequence.

1. Convert material specifications to R-value:
   a. R-value given — no conversion necessary
   b. k-factor is given with a required thickness (T) in inches:
      $R = 1/k \times T$
   c. C-factor is given: $R = 1/C$
2. Determine the R-value of proposed alternate floor protector:
   a. Use formulas in step 1 above to calculate R-value of proposed material(s).
   b. For multiple layers, add R-values of each layer to determine overall R-value.
3. If the overall R-value of the floor protector system is equal to or greater than the floor protector specifications given, the alternate is acceptable.

Definitions:

Thermal conductance (C) = $\frac{BTU}{(hr)(ft^2)(°F)} = \frac{W}{(m^2)(°K)}$

Thermal conductivity (k) = $\frac{(Btu)(inch)}{(hr)(ft^2)(°F)} = \frac{W}{(m)(°K)} = \frac{Btu}{(hr)(ft)(°F)}$

Thermal resistance (R) = $\frac{(ft^2)(hr)(°F)}{Btu} = \frac{(m^2)(°K)}{W}$

This stove is designed for use with Solid Wood and Coal fuel only

-Use only dry, seasoned, natural untreated wood.
-For best results use solid, bituminous, anthracite and lignite coal. Never use manufactured coal "bricks" made of coal dust with wax-type binder.
-Egg or larger size of coal can be used.
-Store coal in dry, well ventilated area.
CAUTION:Use Solid Wood and Coal Fuel only. Do not burn garbage or flammable fluids as gasoline, naphtha or engine oil.

Safety notes

- In manipulations with the cooker, You must use it propertly as the instruction says.
- For combustion in the cooker You can use just fueles with small contents of smoke in combustion (woods, coal and briquettes) and small combustion power.
- Useing any kind of explosive apparatus on the cooker or in the cooker is forbidden.
- Avoid the use of aerosol sprays in the vicinity of the stove when it is in operation.
- It is forbidden to make red-hotplate.
- If the windows and doors in the room with the cooker well sealed, it is necessary to ventilate the room with the cooker in it (necessary for combustion).
- Do not fit an extractor fan in the same room as the appliance.
- Leaving easy inflammable and explosive matters in fueles drawer or close to cooker is forbidden.
- The front of the stove becomes very hot when it is in use. Do not place towels on the handrail when the stove is alight and keep pets and kids away.

Description of stove

1. mask
2. frame
3. collar for pipe connection
4. round plate
5. working regime button
6. hotplate
7. firebox door
8. oven door
9. drawer
10. cooker stand
11. flue restrictor button
12. aperture for cleaning
13. wire shelf
14. oven
15. pan
16. ash box
17. auxiliary equipment
18. cleaning equipment

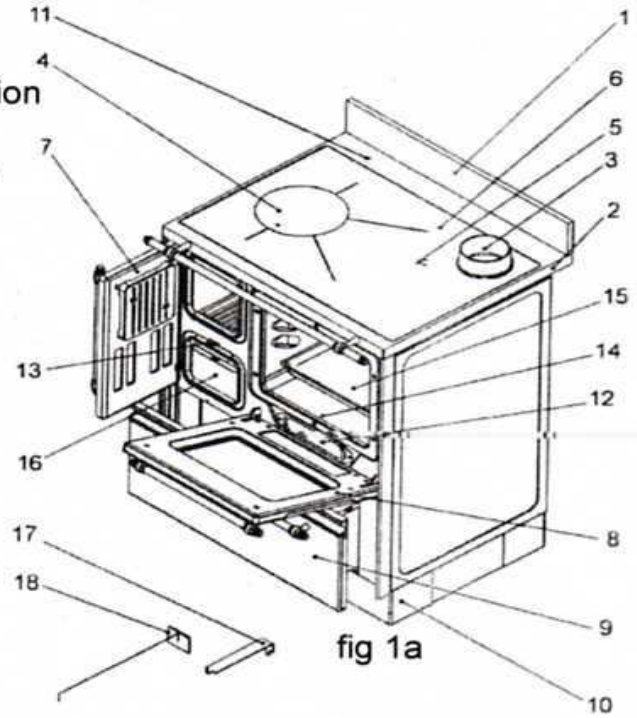

fig 1a

Oven glass: Replace oven glass only with original “Fully tempered soda-lime” glass available from manufacturer or authorized dealer.

How to use a cooker

Before You use the stove for the first time, You must read operating instruction from the book infront of You.
You can see positions 5 and 11 from the fig 1.
5 - working regime button,
11- flue restrictor button.
Working regime button have two positions
„**O**" position for ignitieing the fire and cooking,
„**Z**" position for the cooking, roasting and warming at the same time.
Flue restrictor button have two positions (combustion speed depends of draught):
MAX (maximum draught) and
MIN (minimum draught).
Button position is set by auxiliary equipment (position 17 on the fig 1).
Flue restrictor button cud be set in MAX, or MIN, or some where between this two positions.

flue restrictor button (position 11, fig 1)

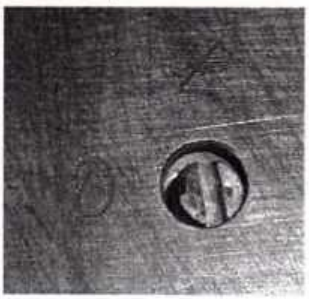

working regime button (position 5, fig 1)

auxiliary equipment

Starting the first fire (stiring and makeing a fire)
The cooker should only be cleaned when it is cold.
Before You start the fire for the first time, You must clean the cooker with soft duster.
Protected coat must be away from the plate and from the frame too.
At the firs moment, when You start the first fire, could be little smoke in the room from the surface of the plate.

As a fuel for ***ROYAL*** solid fuel cooker You can use fuel with small combustion power:

- woods, charcoal
- and briquettes

Stiring fire in the firebox:

- working regima button must be in position „O“,
- fuel restrictor button must be in position „MAX“,
- firebox door must be open,
- fuel for stiring must be in firebox of the stove,
- start the fire now,
- close the firebox door now,
- once the fire becomes established add some large pieces of wood or coal in the firebox, close the firebox door, working regime button put in position „Z“, flue restrictor button put in position between MAX and MIN.

If You use briquette as a fuel, You must wait till briquettes become a glowing coals and than put the regime button to position „Z“.

It is forbidden to use as a fuel:

- explosive materials,
- easy inflammable materials,
- plastic materials,
- skin,
- food waste,

materials whose not good for stove, because of bad combustion and bad smell (materials whose not ecological), they have very bad influance on ecological syistem.

If there are higher out side temperature than the influance of the draught is wery bad and You must stoke permanently with small quantity fuel.

After the each filling the stove with the fuel, we are recommend it to You, to leave it about 30 minutes to burn on maximum temperature because of the combustione unsttching jointes, whitch are the main causes of condensation in the stove.

Conditions for normal working regime:

- regulary cleaning (stove and chimney),
- regulary ventilateing the rooms,
- continualy cleaning of firebox, from the ashies (with auxiliary equipment),
- continualy discharging and cleaning ashpan,
- using the small parts of coal, put the wood before, coal could be wedged in grid and diminish draught trough stove.

IF THE CHIMNEY CONNECTOR GLOWS RED, IMMEDIATELY CALL THE FIRE DEPARTMENT

Working regimes

COMBINE-working regime, for cooking, roasting and warming at the same time. Working regime button put in „Z" position and flue restrictor button put in position between MAX and MIN.
FAST COOKING- working regime, for fast cooking. Working regime button put in „O" position and flue restrictor button put in position between MAX and MIN. Oven door must be closed all time of the cooking.
WARMING- working regime, for warming. Working regime button put in „Z" position and flue restrictor button put in position between MAX and MIN. Oven door must be open all time of the warming. Using the coast for warming, You must put it in firebox for several times (coast combustion fast).
ROASTING-working regime. Before roasting working regime button put in „Z" position and flue restrictor button put in position between MAX and MIN. Oven door must be open and after the puting pan in oven, oven door must be closed now.

Cleaning and observing the cooker

The ***ROYAL*** solid fuel cooker should only be cleaned when it is cold. Exterior surface and interior surface must be coold for cleaning. The exterior can be dusted with firm brush.
We recommend to clean the oven after each cooking cycle, this makes easier the removal of the cooking residusard and flat spot, and will prevent their burning during the following cooking cycle.
Exterior surface cleaning enameling and chromium surfaces should be cleaned with soft rag and soap or detergent, and than with dry rag.
Before You start cleaning the oven, remove bottom sheet metal of oven.
Dirt from the plate must be away before using the plate of the stove, with cleaning equipment, and than must be spread over with graphite or chrom powder. Never wash these parts when they still hot and never use abrasive powders.
Interior surface cleaning to clean interior surface, ***ROYAL*** solid fuel cooker must be deinstalated in next steps:
(to do away)

- smoke pipe,
- round plate with auxiliary equipment,
- hotplate,
- oven door (fig 5)

- unroll two buttons on the cover from the aperture for cleaning (position 12, fig 1),
- cover of aperture for cleaning is moveing away.

Now, You can started with cleaning of ***ROYAL*** solid fuel cooker interior surface, by next steps:

- soot from protecting steel sheet must be moved to the botom with auxiliary equipment trough vertical channel,
- vertical channel must be cleaned too with auxiliary equipment,
- next step is to clean the botom of the ***ROYAL*** solid fuel cooker useing auxiliary equipment,
- hotplate and round plate must be cleaned by auxiliary equipment.

ROYAL solid fuel cooker is clean now, and You can start with instalation in order from the last to the first step.

cleaning interior surface of the ***ROYAL*** solid fuel cooker

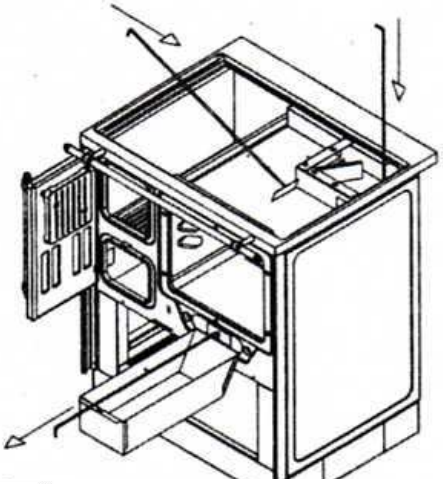

EN 12815		
cooker SD 2072E/ROYAL 720 LUX		
dimenzije VxŠxD dimension HxWxD	mm	850x720x600
priključak dimnjaka outlet	mm	Ø120
težina weight	kg	115
snaga thermal output	kW	7.8
emisija CO pri sagorevanju emission of CO in combustion	%	0.68
tip goriva flue types		coal Krepoljin
potrošnja goriva fuel per 60 minutes	Kg/h	3.2
temperature gasova flue gas temperature	°C	263
promaja flue draught	Pa	10-12
napomena/warning: Regulacijom promaje u štednjaku, reguliše se temperatura, snaga i brzina sagorevanja goriva. Using a flue restrictors, you are controling flue gas temperature, thermal output and combusting fuel per one hour.		

EN 12815		
cooker SD 2090E/ ROYAL 900		
dimenzije VxŠxD dimension HxWxD	mm	850x900x600
priključak dimnjaka outlet	mm	Ø120
težina weight	kg	133
snaga thermal output	kW	8.6
emisija CO pri sagorevanju emission of CO in combustion	%	0.3
tip goriva flue types		coal Krepoljin
potrošnja goriva fuel per 60 minutes	Kg/h	3.5
temperature gasova flue gas temperature	°C	264
promaja flue draught	Pa	10-12
napomena/warning: Regulacijom promaje u štednjaku, reguliše se temperatura, snaga i brzina sagorevanja goriva. Using a flue restrictors, you are controling flue gas temperature, thermal output and combusting fuel per one hour.		

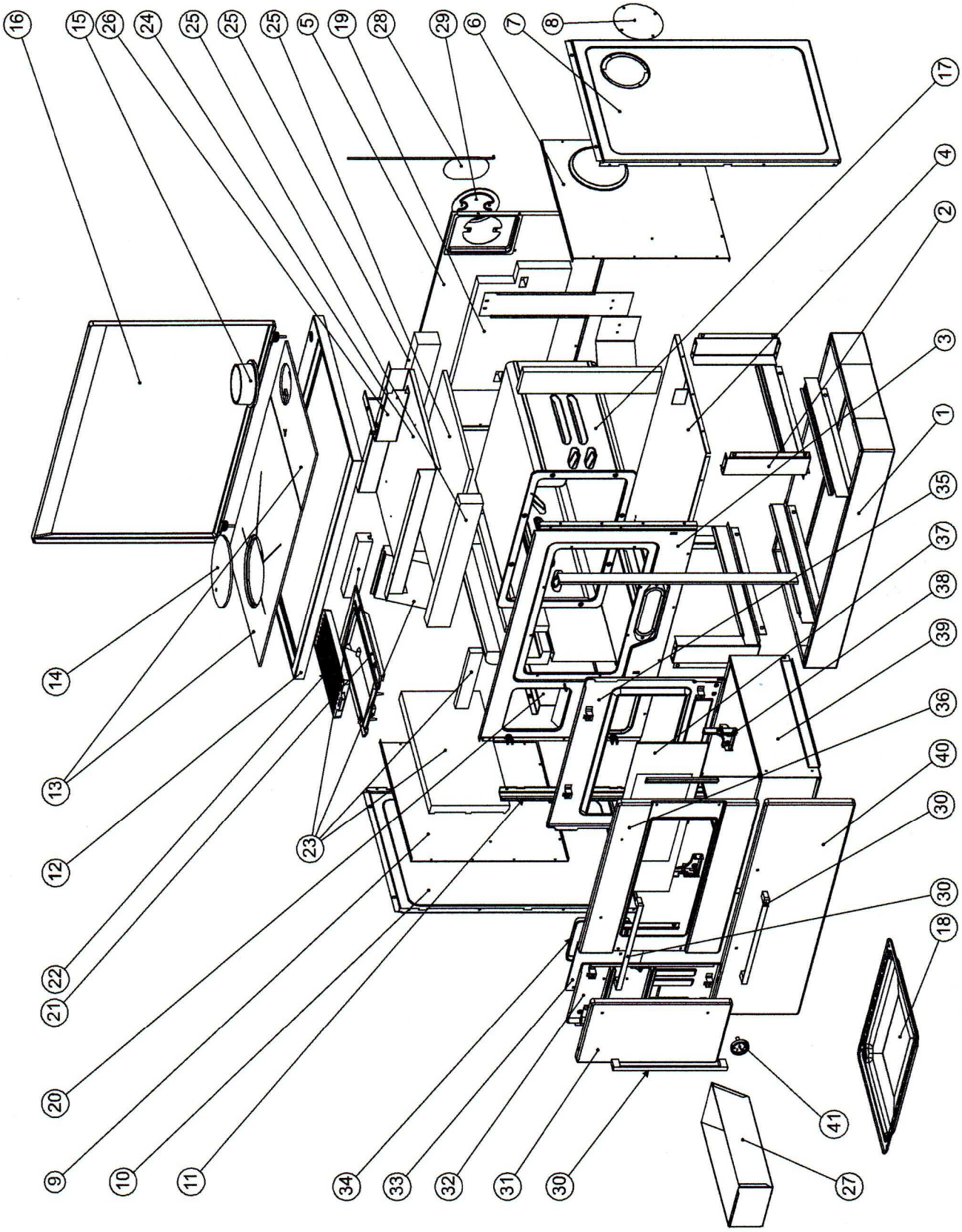
16
15
26
24
25
25
25
5
19
28
29
6
7
8
17
4
2
3
1
35
37
38
39
36
40
30
30
18
41
27
30
31
32
33
34
11
10
9
20
21
22
12
13
14
23

Parts list-Model Royal	
R.br.	
1.	Base of the stove
2.	Slider's base
3.	Front panel
4.	Bottom panel
5.	Rear panel
6.	Interior side panel
7.	Exterior side panel – without opening for top flue position model
8.	Not included on top flue position model
9.	Interior side panel
10.	Exterior side panel
11.	Design strip
12.	Stove's frame
13.	Cooking surface
14.	Lid opening
15.	Flue collar
16.	Cover – splash guard
17.	Oven
18.	Pan
19.	Insulation
20	Thermal brick's base
21.	Grate holder
22.	Grate
23.	Thermal bricks
24.	Oven's cover
25.	insulation
26.	Smoke's guder
27.	Ash pan
28.	Draft regulator
29.	Flue opening cover-not included on models with top flue position
30.	Handle
31.	Fire box door – exterior panel
32.	Fire box door – interior panel
33.	Fire box door panel
34.	Interior fire box door cover
35.	Interior panel oven's door
36.	Oven 's exterior door panel
37.	Oven's door- glass
38.	Oven's door hinge
39.	Storage drawer
40.	Drawer's front cover
41.	Thermometer

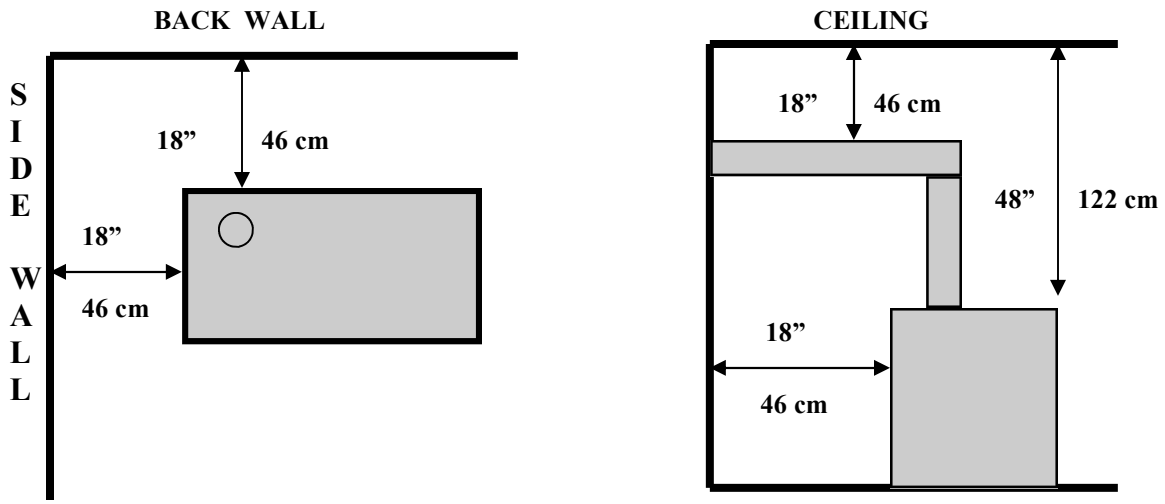

SINGLE WALL PIPE-MINIMUM CLEARANCES FOR USA/CANADA

Some example of clearance reduction;
- Using heat shields on back and sidewalls allowing at least 1” of space away from the walls for ventilation. The inch spacing is necessary to ensure air circulation between the protection and the wall so that the wall is not subject to high temperatures. The spacer used must be non-combustible. Another method to achieve the same type of protection is using brick or masonry with 1” air space between the brick or masonry and the wall. Using those shields can reduce clearances by 60%.
- Using special interior double wall stove pipe can reduce distance to as little as 6”
- Protecting wall or ceiling adjacent to the pipe.
- Installing an approve ‘pipe heat shield’ onto the stovepipe (reduces 18” to 9”).
- WARNING: Do not place stove to close to the shield. There should be enough space between for proper air ventilation.

FLOOR PROTECTOR

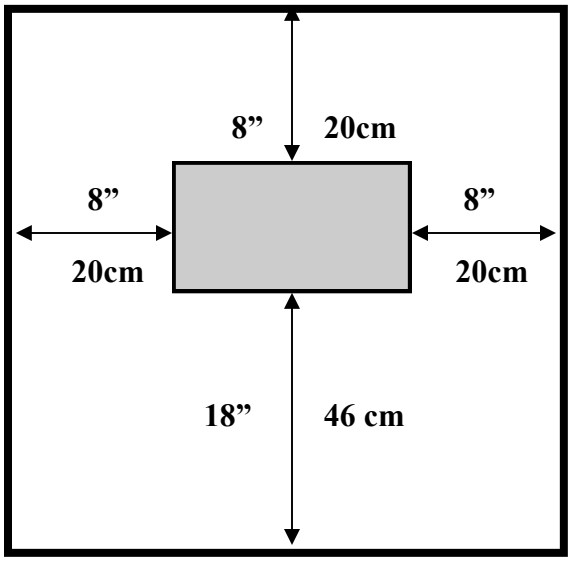

FRONT

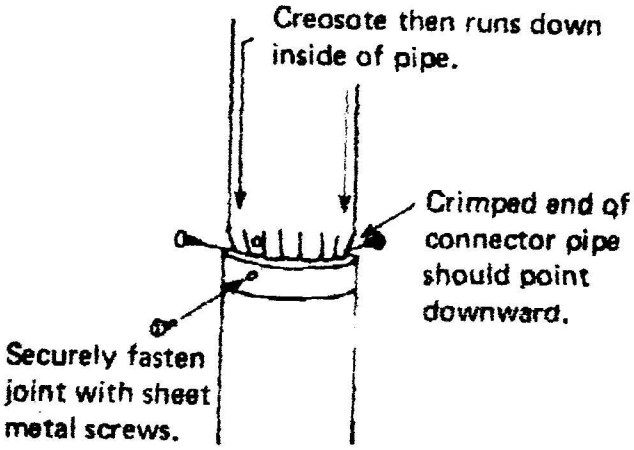

Figure 1. Proper connection of stovepipe

Floor protection must be minimum 3/8-inch non-combustible material extending beneath the stove.

"Milan Blagojevic AD" products are manufactured under the strict Standard of the World Recognize ISO 9001: 2000 Quality Assurance Certificate.

Limited One year Warranty

"Milan Blagojevic AD" warrants its products against manufacturing defects to the original purchaser only—i.e., individual (register customer) whose name appear on the warranty registration card., for a period of One year from date of purchase from only an authorized dealer.

If within the one year period, your product should develop a defect due to materials or workmanship of the original new product, Milan Blagojevic AD (manufacturer), Sopka Inc (importer), or your authorized dealer will supply ONLY the parts necessary to make the repairs. (Labor Not Included) and is subject to following condition and limitations:

This limited warranty does not cover damages caused by misuse, lack of maintenance, accident, alterations, abuse or neglect.

This limited warranty does not cover any scratches, dents, corrosion or discoloring caused by excessive heat, cleaning chemicals, nor chipping on porcelain enamel parts, nor any venting components used in the installation.

Installation must be done in accordance with installation instructions included with product and all local and national building and fire codes.

Milan Blagojevic AD will not be liable for incidental and consequential damage of any nature. This warranty gives the purchaser specific legal rights which may vary from state to state. No other warranty is to be implied or expressed, including warranties implied for a specific or particular purpose.

Milan Blagojevic AD reserves the right to have its representative inspect any product or part thereof prior to honoring any warranty claim.

Safety label

Manufactured By

MBS

Feel warm and safety with us

Djure Strugara 20
11300 Smederevo
Srbija
Headquarters: (+381) 26 633-600
Sales department: (+381) 26 221-443
Fax: (+381) 26 226-926
www.mbs.rs office@mbs.rs

Made in Serbia
Imported and Distributed by:
Sopka Inc.
Cleveland, Ohio 44109 USA
216-543-7002
www.sopkainc.com
contact@sopkainc.com

MH46686

C UL US LISTED

SOLID FUEL ROOM HEATER

NO.

UL 1482, ULC-S627

- FOR USE WITH SOLID WOOD FUEL AND COAL FUEL ONLY -

Model: ☐ Magnum ☐ Royal 720 ☐ Royal 900

Model Modèle	Date of manufacture Date of fabrication	Month Mois	Year Année	Serial No. Nº de série

TO PREVENT HOUSE FIRES:
Contact local building or fire officials about restrictions and installation inspection in your area.
Install and use only in accordance with Sopka Inc. installaton and operating instructions and local codes.
In the absence of any local codes, installation must meet minimum requirements of NFPA 211 in the USA, and B365 in Canada.
Refer to manufacturer's instructions and local codes for precautions required for passing a chimney through a combustible wall or ceiling.
Inspect and clean chimney system frequently in accordance with manufacturer's instruction.
Do not connect this stove to a chimney flue serving another appliance.
Do not use grate or elevate fire. Build wood fire directly on hearth.
Flue connector pipe must be 6" diameter, minimum single wall 24 msg black or 25 msg blued steel.
Chimney must be factory built 6" diameter Class,"A" 103 Type HT, or masonry.

TO PREVENT CREOSOTE FIRES:
Inspect and clean chimney frequently - under certain conditions of use, creosote buildup may occur rapidly. Do not use other fuels than firewood.

CAUTION: Fully open combustion air control before opening the fuel feed door. Only operate the wood heater with the doors closed.
Replace fire box glass only with original "Ceramic" glass available from manufacturer or authorized dealer, only.

POUR EVITER LES INCENDIES DOMESTIQUES:
Contactez les Autorités des bâtiments et les pompiers pour obtenir des instructions concernant les restrictions et inspections d'installation dans votre région.
Installez et utillisez cet appareil uniquement en respectant les instructions d'installation et d'utilisation du Sopka Inc.
Respectez également les réglementations locales.
En l'absence de réglementations locales, l'installation doit respecter les normes minimales de NFPA 211 aux Etats-Unis et B365 au Canada.
Référez-vous aux instructions du fabriquant aux réglementations locales pour obtenir des instructions concernant les précautions nécessaires pour le passage de la cheminée á travers une paroi ou un plafond combustible. Inspectez et nettoyez le système de cheminée fréquement selon les instructions du fabriquant.
Ne connectez pas ce poêle à un conduit de cheminée utilisé par un autre appareil. N'utilisez pas de grille et ne faites pas monter le feu. Etablissez le feu de bois directement dans l'âtre.
Le tuyau de connexion au conduit doit avoir un diamètre de 6" (152 mm), une paroi unique en acier de 24 msg (noir) ou 25 msg (bleu).
Le matériau de la cheminée doit être 103HT de classe A de 6" (152 mm) ou une construction en dur.

POUR EVITER LES FEUX DE CREOSOTE:
Inspectez et nettoyez la cheminée régulièrement - Sous certaines condition d'emploi, la créosote peut s'accumuler rapidement. Ne pas utiliser d'autres combustibles que le bois.

ATTENTION: Ouvrez complétement le contrôle d' air de combustion avant d' ouvrir la porte du foyer. N'utilisez le poêle que lorsque les portes sont fermées.
Remplacez la vitre du foyer de feu seulement par une vitre en "céramique" d'origine, fournie uniquement, par le fabricant ou un revendeur autorisé.

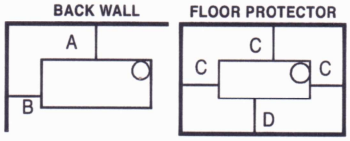

	Magnum	Royal 720	Royal 900
A	18" (46cm)	18" (46cm)	18" (46cm)
B	18" (46cm)	18" (46cm)	18" (46cm)
C	8" (20cm)	8" (20cm)	8" (20cm)
D	18" (46cm) FRONT	18" (46cm) FRONT	18" (46cm) FRONT

Floor protection for Canada: 18" (46 cm) from unit to front of floor protector. Floor protector must be under connector pipe for a thru-the-wall configuration. Floor protection must be minimum 3/8" non-combustible material and extending beneath the stove, and to front and sides as indicated.

Protection de sol pour Canada: 18" (46 cm) de l'avant de l'appareil au bord de la protection. La protection de sol doit avoir une épaisseur de 3/8 pouces (1 cm), être d'un matériau non combustible et être placée devant et à côté de la porte ainsi qu'à l'arrière, comme indiqué.

CAUTION

HOT WHILE IN OPERATION - DO NOT TOUCH. KEEP CHILDREN AND CLOTHING AWAY. CONTACT MAY CAUSE SKIN BURNS. SEE NAMEPLATE AND INSTRUCTIONS. KEEP FURNISHINGS AND OTHER COMBUSTIBLE MATERIALS A CONSIDERABLE DISTANCE AWAY FROM THE APPLIANCE. DO NOT OVERFIRE - IF HEATER OR CHIMNEY CONNECTOR GLOWS, YOU ARE OVERFIRING.

ATTENTION

CHAUD PENDANT LE FONCTIONNEMENT - NE PAS TOUCHER. TENIR ELOIGNES LES ENFANTS ET LES VETEMENTS - LE CONTACT PEU CAUSER DES BRULURES. CONSULTEZ LA PLAQUE D'IMMATRICULATION ET LES INSTRUCTIONS. TENIR LES FOURNITURES ET AUTRES MATIERES COMBUSTIBLES A DISTANCE DE L'APPAREIL. EVITER DE SURCHAUFFER - SI LE FEU OU LA CHEMINEE DEVIENT ROUGE, VOUS SURCHAUFFEZ.

DO NOT REMOVE THIS LABEL / NE PAS ENLEVER CETTE ETIQUETTE