J.A.ROBY INC.

Warmth from the heart of J.A.ROBY INC.

# Instruction Manual

## ROBY 2500 CUISINIERE

## ROBY 2500

NATIONAL FIREPLACE INSTITUTE NFI CERTIFIED www.nficertified.org

We recommend that our woodburning hearth products be installed and serviced by professionals who are certified in the U.S. by the National Fireplace Institute® (NFI) as NFI Woodburning Specialists or who are certified in Canada by Wood Energy Technical Training (WETT).

Wood Energy Technical Training www.wettinc.ca

Intertek

CAN/ULC S627-M00
UL 1482
CAN/CSA STD B415.1-10

490, rue de l'Argon

Quebec, CANADA  G2N 2C9

Tel.: 418-849-8095  Fax : 418-849-0077

March 1st, 2015

# Table of contents


Introduction....3
Nameplate....4
Appliance Dimensions....5
Installation....6
Floor protection....6
Floor protection plate minimum dimensions....6
Clearances of the stove until the floor plate protection....7
Minimums clearances to the non-combustible material....8
**Assembly before installation**....9
Legs installation....9
Warmer stove Assembly (Optional)....9
Fan and Snap disc box installation....11
Firebricks installation....12
**General stove installation steps.**....14
Chimney connector installation....15
Mobile home installation....17
Chimney installation, General steps....18
Inside Masonry Chimney, Vertical Installation....18
Outside Vertical Installation....19
Cathedral Vertical Installation....19
Offset Installation....19
Vertical Installation....20
**External combustion air source.**....21
**Exterior Air Intake pipe.**....21
Installation of Air Intake Pipe....21
Air Inlet Obstruction....21
Stainless steel deflector replacement....22
**Stainless steel tubes replacement.**....23
Stainless steel tubes Installation....23
**Operating Instructions**....24
**Primary and secondary air admission control.**....24
**Lightning fire.**....24
First fire....24
Keep a fire....24
Fans Controls....24
**Maintenance.**....25
Ash Removal....25
Ash Disposal....25
Creosote Formation....25
Chimney Inspection....25
Chimney Sweeping....25
Door care....25
Air Tighten Adjustment....26
Cleaning up glass....26
Uninstalling and installing door....26
Broken glass replacement....26
Fiberglass rope replacement....26
**What to do in case of Chimney Fire.**....27
Annexe 1....28
Door assembly....28
Annexe 2....29
Parts that can be replaced....29
**J. A. ROBY LIMITED LIFE WARRANTY**....30


March 1st, 2015

# Introduction

Read all instructions carefully before install your new J. A. ROBY wood stove. A good installation is very important for a safe and effective use of J. A. ROBY INC stove. In the doubt about the instruction step to install your appliance correctly, we suggest to call a professional master installer. A wrong installation may result with a fire, burns and possible death.

Keep these instructions.

This appliance must be connect to

- A HT type factory-built chimney approved UL103 or ULC 629 with 6 inches diameter (15.24 cm)
- A code-approved masonry chimney with a flue liner with a 6 inches diameter (15.24cm)

N.B: Be warned that the local's codes and rules can have more specific requirement than this manual. You can consult a master installer, fire officials or local building about restriction and installation inspection in your area and to determine if you need to obtain a permit

DO NOT CONNECT THIS APPLIANCE TO A CHIMNEY FLUE SERVING ANOTHER APPLIANCE

# Nameplate.

NE PAS ENLEVER CETTE ÉTIQUETTE DO NOT REMOVE THIS LABEL

POÊLE À COMBUSTIBLES SOLIDES HOMOLOGUÉ / LISTED SOLID FUEL BURNING SPACE HEATER

(NOVEMBRE / NOVEMBER 2014)

C US

Intertek

W/N XXXXX

**FABRIQUÉ AU CANADA PAR:**
**MADE IN CANADA BY:**

J.A.ROBY INC.

**Au cœur de la chaleur**
**Warmth from the heart of J.A. Roby Inc.**
490 rue de l'Argon, Québec, Canada, G2N 2C9

WH-

**MODÈLES / MODELS:**

- TISON
- ROBY2500
- FORGERON
- ATMOSPHÈRE 2012

ÉGALEMENT POUR UTILISATION DANS LES MAISONS MOBILES / ALSO FOR USE IN MOBILE HOME.

- CUISINIÈRE / COOKSTOVE

PAS POUR LES MAISONS MOBILES / NOT FOR USE IN MOBILE HOME

-Installer et utiliser seulement conformément aux instructions du manuel d'installation et d'utilisation du manufacturier. Renseignez-vous auprès des responsables locaux de la construction et de la prévention des incendies au sujet des restrictions et inspections des installations dans votre région.
-Install and use only in accordance with manufacturer's Installation and Operating Instructions.
Contact local building or fire officials about restrictions and installation inspection in your area.
-Dégagements minimaux aux matériaux combustibles (mesuré à partir du dessus du poêle) Avec tuyau à parois simple et pare chaleur*
-Minimum clearances to combustibles materials (measured from stove top) With single wall connector and heat shield*.

| | |
|---|---|
| CERTIFIÉ SELON LA NORME ENVIRONEMENTALE: ENVIRONMENTAL CERTIFIED TO: | CAN / CSA B415.1-10 |
| MIS À L'ÉPREUVE SELON: TESTED TO: | ULC STD S627.00 / UL 1482-7 |
| EMISSION / RATE: | 1.3 gr/h |
| HHV / HIGH HEAT VALUE: | 73.04% |
| LHV / LOW HEAT VALUE : | 78.61% |
| EFFICACITÉ MOYENNE/ AVERAGE CAPACITY: | 53,935 Btu/h |

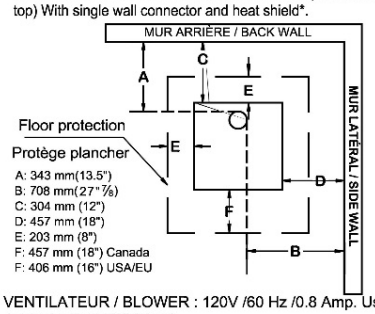


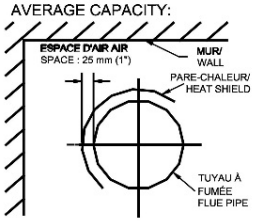


- Tuyau à parois simple et pare-chaleur*
- Single wall connector and heat shield*

VENTILATEUR / BLOWER : 120V /60 Hz /0.8 Amp. Use only J.A.Roby Part Kit# (Vent)

- Pour plus de sécurité Observer les directives du fabricant pour l'installation et l'utilisation du poêle.
- Cet unité doit être installé sur un protège plancher incombustible de 10mm (3/8") dimmensionné selon le dessin ci haut.
- Ne pas surchauffer, si le poêle ou le collet de la cheminée deviennent rouge le poêle surchauffe.
- Ne pas brancher cet appareil sur une cheminée servant à un autre appareil.
- Inspecter et nettoyer la cheminée fréquemment. Sous certaines condition d'opération le créosote peut s'accumuler rapidement
- Ne rien entreposer sous le poêle.
- Ne pas utiliser de chenets ou de grilles pour élever le feu.
- Préparer le feu directement sur l'âtre.
- Remplacer la vitre que par un verre de céramique de 5mm d'épaisseur
- Pour une utilisation avec du bois de chauffage seulement
- Brûler avec la porte fermée.
- Exigences pour installation dans une maison mobile: kit de sortie d'air extérieur, grille homologuée pour la prise d'air extérieur, connecteur à double parois homologué, un capuchon avec pare-étincelle homologué.
- DANGER: Risque de choc électrique, avant l'entretien débrancher l'appareil. Ne placer pas le cordon d'allimentation en face ou en dessous de l'appareil.
- ATTENTION: les pièces mobiles peuvent causer des blessures, ne pas opérer l'appareil avec l'accès au ventilateur ouvert.

EXIGENCE: (pare chaleur)
Feuille de métal de 0.33 mm (0.013") d'épaisseur espacée du tuyau à fumée de 25mm (1") par des matériaux incombustibles et de largeur suffisante pour permettre que la plus petite distance aux matériaux combustible non protégés soit d'au moins de 450mm (18")
REQUIREMENT: (Heat Shield)
0.33 mm (0.013") sheet metal spaced out from the flue pipe 25mm (1") by non combustible spacers and such width that the shortest distance to any unprotected combustible surface is at least 450 mm (18"

- -For Safe Operation, Install In Accordance With The Manufacturer's Instructions.
- -This Appliance Must Be Placed on a 10 mm (3/8") noncombustible floor protection like shematic dimension above.
- -Do Not Overfire - If heater or chimney connector glows, You are overfiring.
- -Do Not Connect This Unit to a Chimney Serving Another Appliance.
- -Inspect And Clean Chimney Frequently - Under Certain Conditions Of Use, Creosote Buildup May Occur Rapidly.
- -Do Not Obstruct Space Under The Stove.
- -Do Not Use Grate Or Elevate Firebuild Wood.
- -Fire Directly On Hearth.
- -Replace Glass Only With Ceramic Glass 5mm Thick.
- -For Use With Solid Wood Fuel Only
- -Burn With The Door Closed.
- -Required components for mobile home installation: air inlet kit, listed outside air inlet grid, listed double wall connector, listed chimney for mobile home, listed chimney cap with spark retainer.
- -DANGER: Risk of electric shock. Disconnect power before servicing unit. Do not route power cord under or in front of appliance.
- Caution: moving part may cause injury, do not operate unit with blower access port open.

# CAUTION !

HOT WHILE IN OPERATION. DO NOT TOUCH. KEEP CHILDREN, CLOTHING AND FURNITURE AWAY. CONTACT MAY CAUSE SKIN BURNS. SEE NAME-PLATE AND INSTRUCTION.

# ATTENTION!

CHAUD LORSQU'EN FONCTION, NE PAS TOUCHER, GARDER LOIN DES ENFANTS, DES TISSUS ET DES MEUBLES. LE CONTACT PEUT CAUSER DES BRÛLURES À LA PEAU. VOIR LA PLAQUE SIGNALÉTIQUE ET LES INSTRUCTIONS.

# Appliance Dimensions.

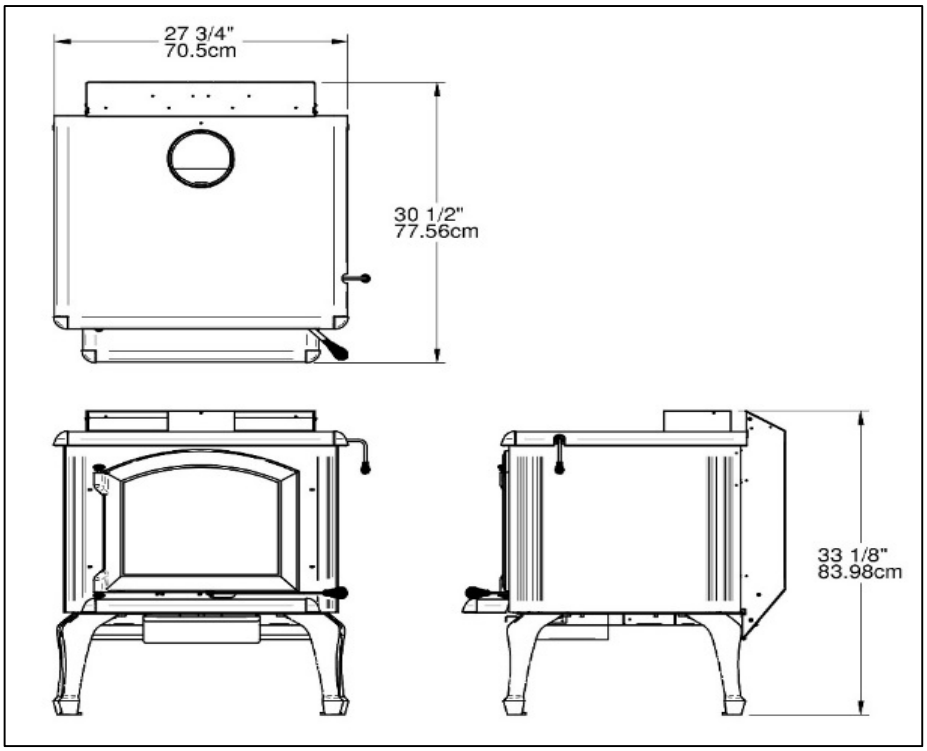


**Figure 1**

# Installation.

## Floor protection.

Your stove must be installed on a non-combustible material plate to protect the floor and avoid fire would be caused by:

- Projections of sparks when door opening  or loading logs
- The heat radiation when stove runaway should have an ignition to the floor and the coating.
- Flow of creosote when there is a fire chimney

The coating used must be non-combustible and approved according to standard UL1618 for USA or approved to the locals codes (Example: cement, brick, ceramic tiles…)

## Floor protection plate minimum dimensions.

The following dimensions are the minimums values and it can be higher.

Canada:

- 41 7/8 (106 cm)
- 47 5/8 (115.88 cm)
- 3/8 in thickness (1 cm)

Unites States

- 41 7/8 (106.42 cm)
- 45 5/8 (115.88 cm)
- 3/8 in thickness (1 cm)

It's necessary to protect the floor behind the horizontal connecting pipe section to the chimney of 2 inches (5cm) besides connecting pipe and up to the vertical connecting pipe. You can extend the protection plate while respecting the clearances of each side of stove.

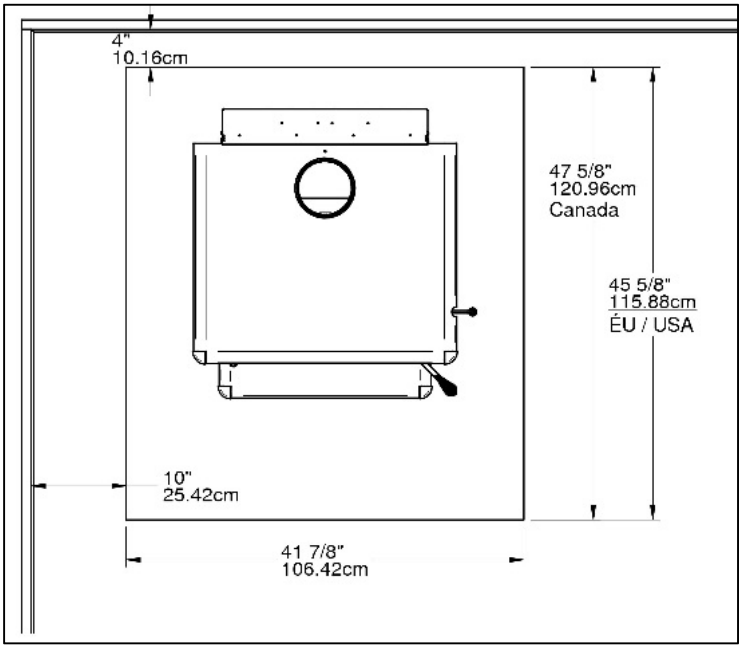

## Clearances of the stove until the floor plate protection.

The following dimensions are the minimums values and it can be higher.

Canada:

- 8 in (20.3 cm) behind
- 8 in (20.3 cm) beside
- 18 in (45.7 cm) in front of the door opening.

United States:

- 8 in (20.3 cm) behind
- 8 in (20.3 cm) beside
- 16 in (40.64 cm) in front of the door opening.

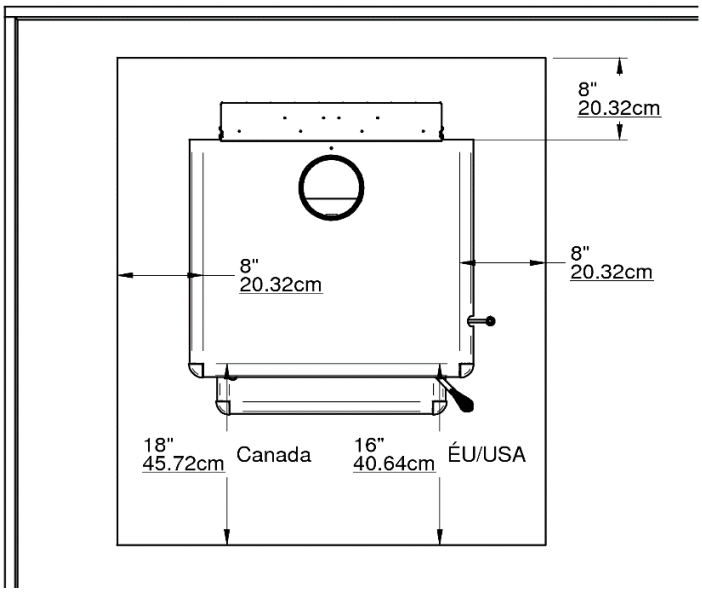

## Minimums clearances to the non-combustible material.

With these reduced clearances, this appliance take a minimum of space where is installed. Whether in the living room or the dining room, the *Cook stove* will complete your decorate by his originality and heating, it requires a minimum clearance of 12 inches to the back (**for a smoke simple pipe with a heat shield** ) and a 18 inches lateral **MINIMUM** clearance.

- **In the case with a smoke simple pipe without heat shield, you must installed the cooker stove that the smoke pipe is to 18 inches of all non-combustible material therefore the MINMUM clearance at the back of the stove will be 16¼ inches (41.3cm).**

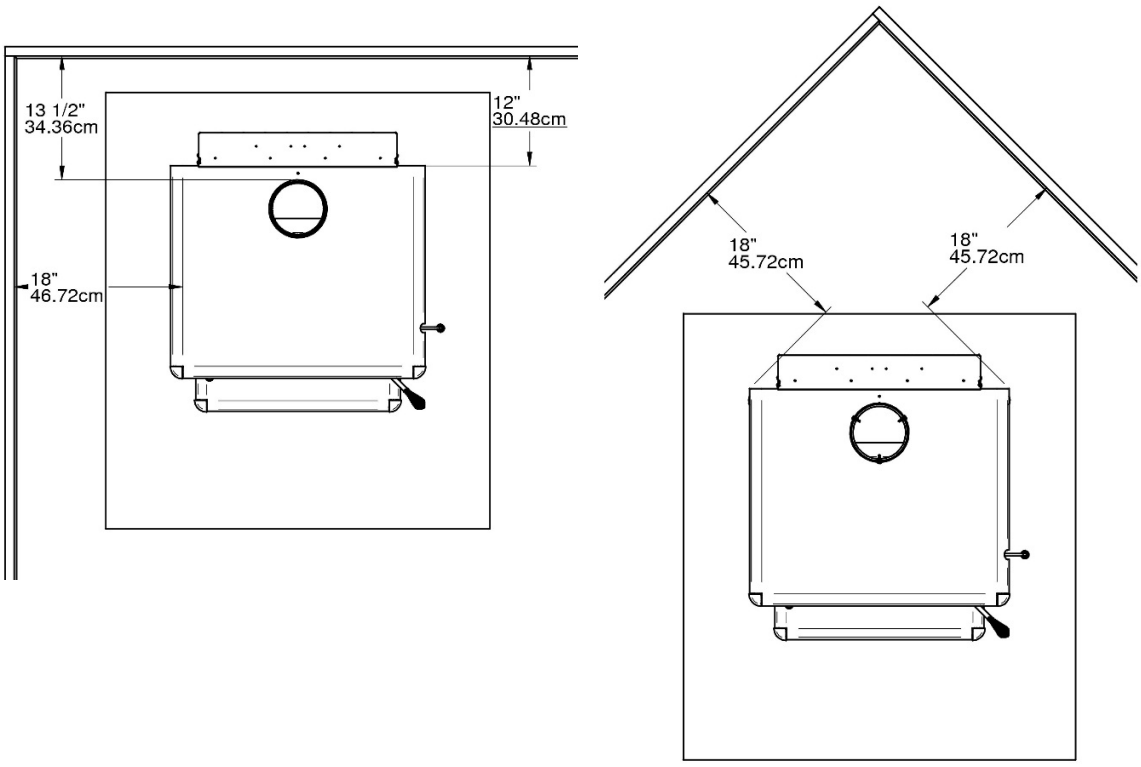


**Figure 3**

- **For a 45° corner installation, or other corner installation, the minimum clearance between the cook stove and non-combustible material must be 18 inches (Figure 3).**

## Assembly before installation

According to chosen option, to save more storage space and shipping. The stove leg and warmer couldn't be assembled in the shop, you must assembly before install the cooker stove.

## Legs installation.

1) Remove legs and bricks from combustion chamber to lighten the stove.
2) Unscrew the stove from the skids.
3) Made 2 column of 7 bricks spaced by 14 inches (36.6 cm) Be sure to remove any nuggets under the bricks
4) Put the stove on the bricks like shown on the illustration and center it on the other direction.

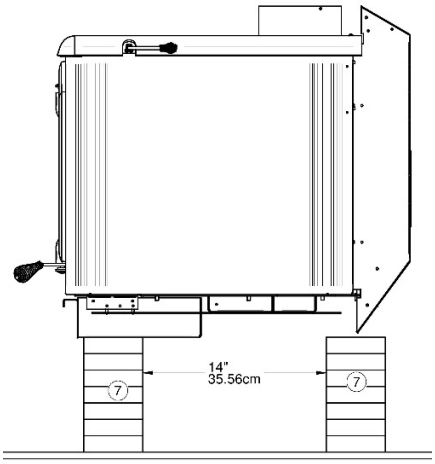


5) Unscrew the nut not completely
6) Install the legs (#1) like the illustration (Attention: Be sure the legs are in place, correctly positioned and in contact with the bottom of the stove.)

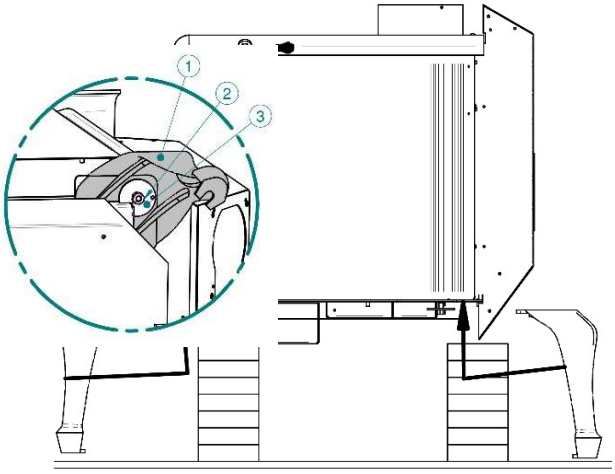


## Warmer stove Assembly (Optional).

Now, you need to know which type of smoke pipe: smoke simple pipe or smoke double pipe.

For the smoke simple pipe: It's not necessary to remove the pre-cut metal part.

For the smoke double pipe, you must remove the pre-cut metal

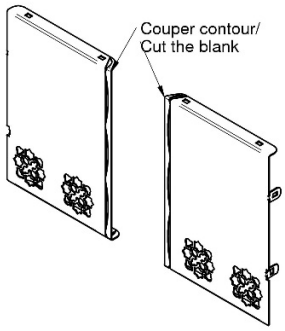


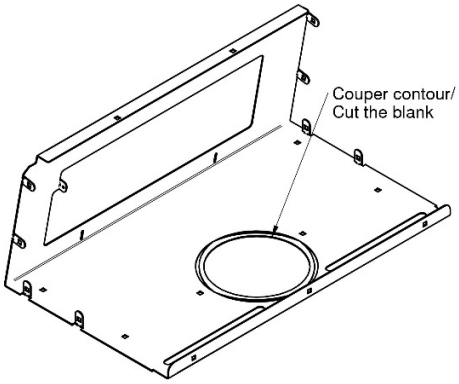


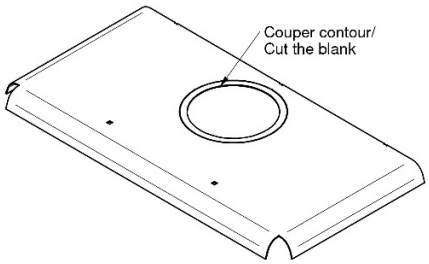


part on the top, inside and in front of the warmer, see pictures beside.

1) Put the packaging product on the ground and put the back on it to protect the painted part

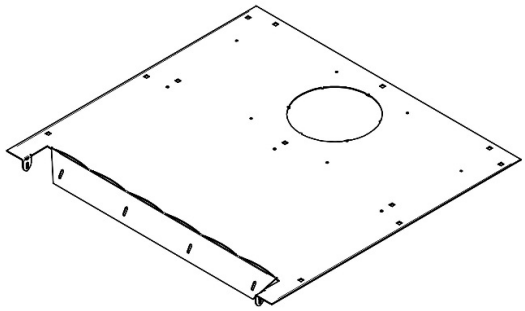

1) Fix the left side.

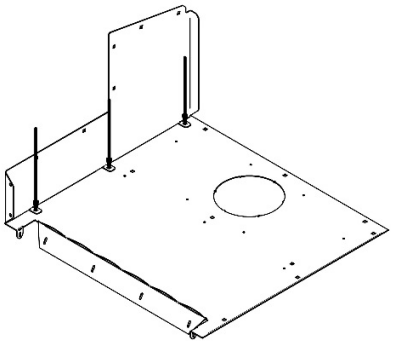

2) Fix the right side.

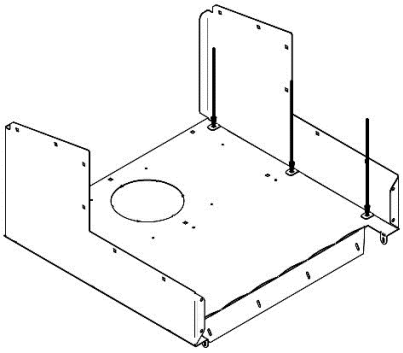

3) Fix the front (with the door) with the two sides and the back. Keep the horizontal holes empty for the chrome decoration.

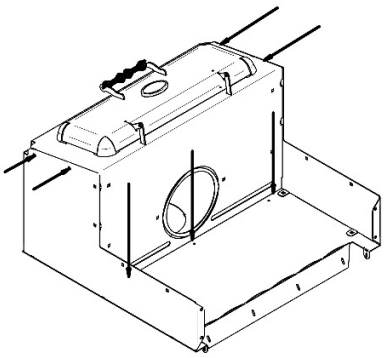

4) Insert the chrome decoration in the hole and fix-it with carriage bolt and nut (2 bolts each).

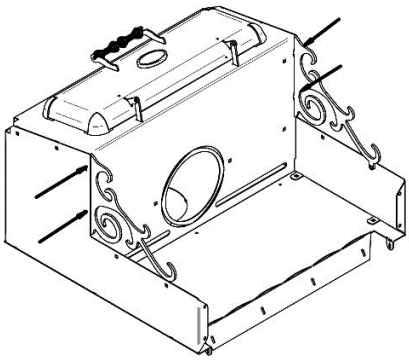

5) Fix the top with the back and with the front too.

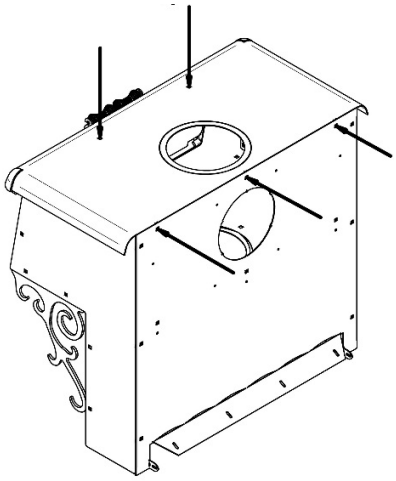

6) Fix the left decorative panel side and finish to install the left chrome decoration

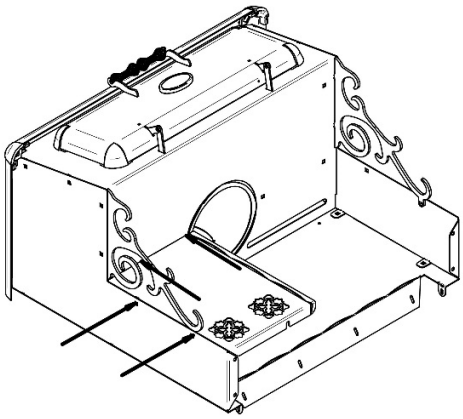

7) Fix the right decorative panel side and finish to install the right chrome decoration.

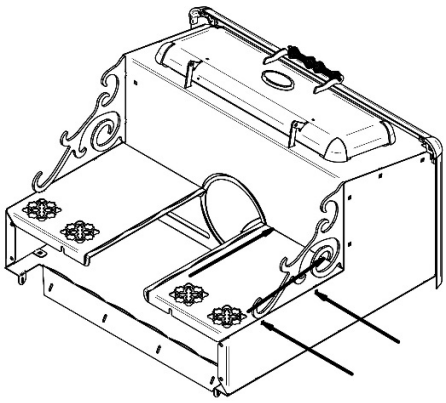

8) Put and fix the warmer with the 6 holes of each side to the cook stove.

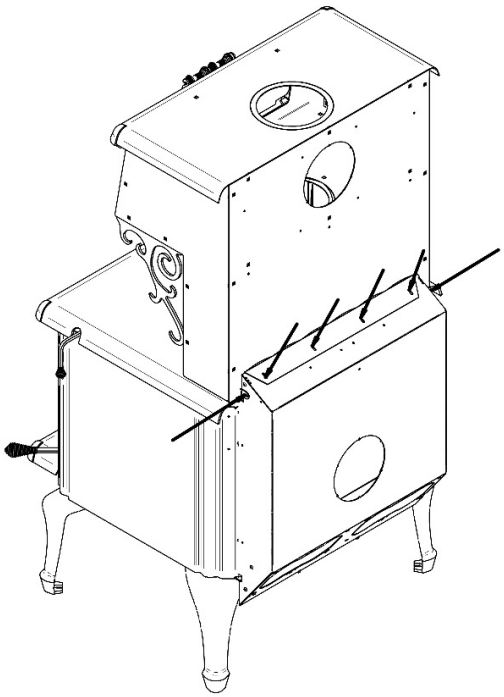

## Fan and Snap disc box installation.

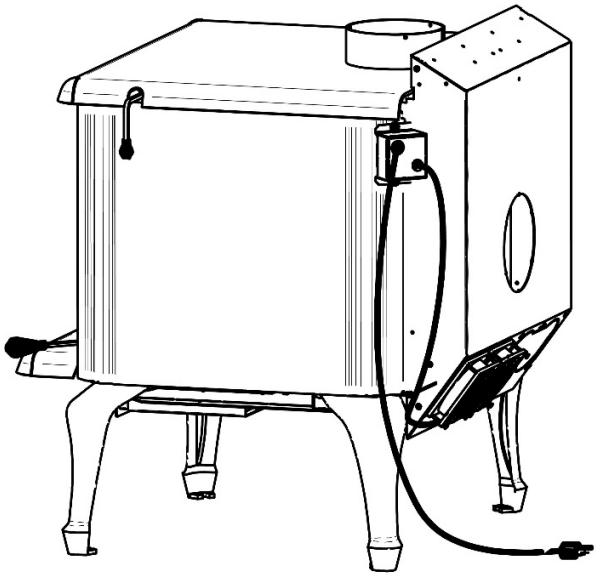

1) Screw fan putting electrical wire in the centered bottom of both Fan.

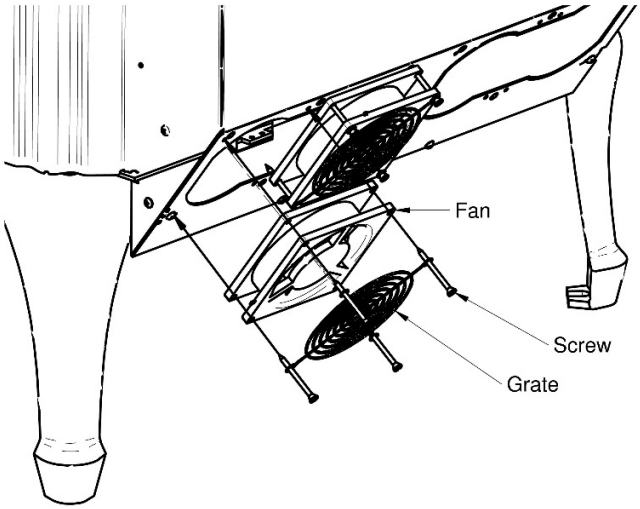


2) Screw snap disc box into the holes made for that at the back side near the vent box.

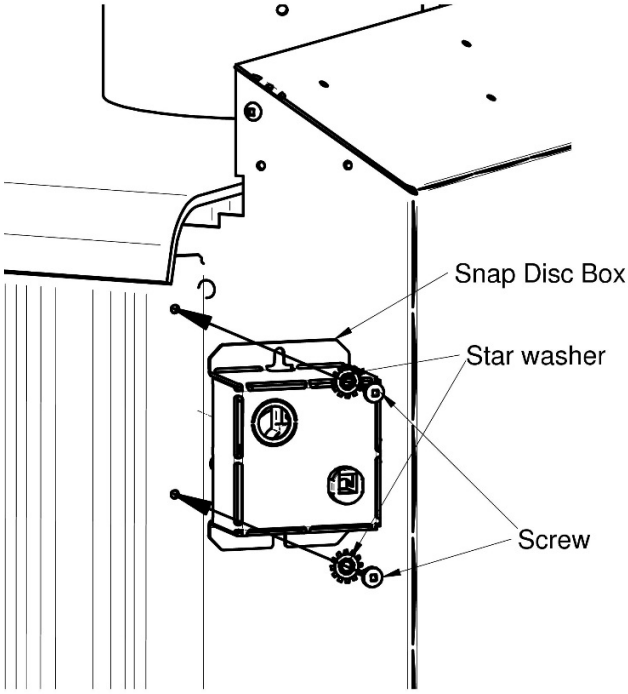


**WARNING: NEVER ROUTE POWER CORD UNDER OR IN FRONT OF THE APLIANCE**

# Firebricks installation.

## *Back firebricks installation.*

1) Put 4 bricks «A» and 1 brick «C» to the middle

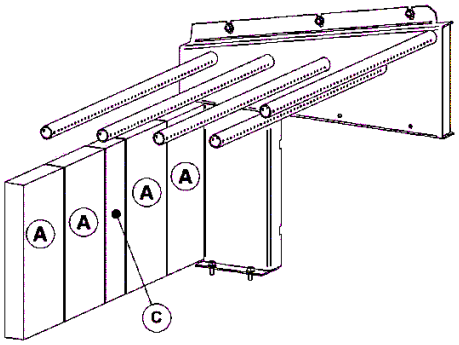


2) Begin to screw the 3 bricks screws in the hole for this purpose, after insert split washer through the screw and do not tight the screws now

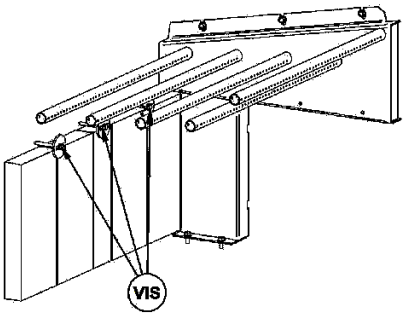


3) Add two horizontal bricks «A» above de 5 previously placed.

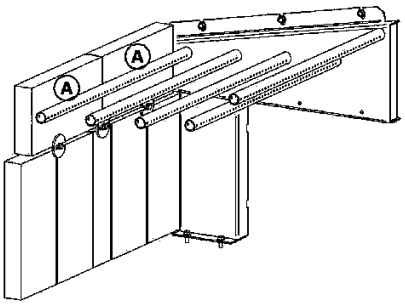


To finish, tighten the 3 bricks screw

## *Side firebricks installation*

1) Put 2 bricks «A» and 1 angled brick «E» beside the right air corridor. ».

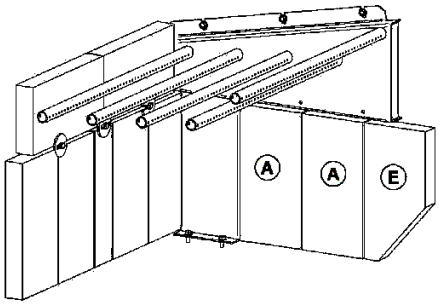


2) Screw the brick screw and insert split washer.

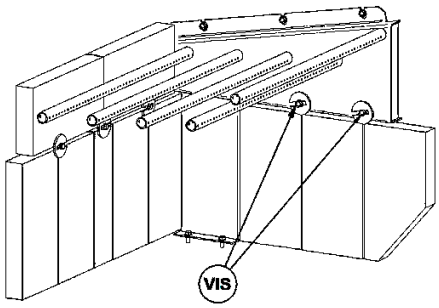


3) Tighten the screws on the air corridor
4) Repeat the 3 steps before to make the other side of the stove.

## *Floor firebricks installation.*

1) Put 2 bricks «A» in the bottom like in the picture.

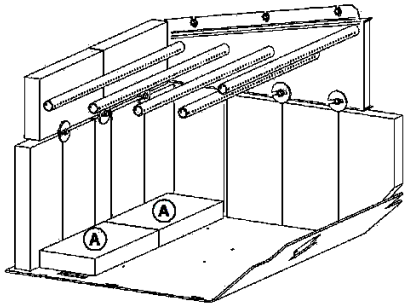


2) After, insert 4 bricks «A» in front the 2 bricks previously placed.

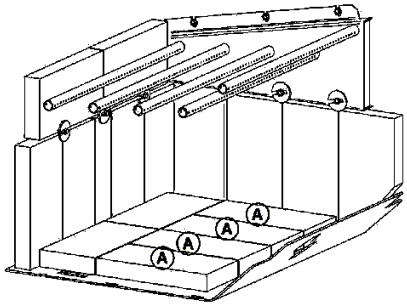


3) Insert 1 brick «A» to the right from the ash plug.
4) Insert 1 brick «D» to the left from the ash plug..

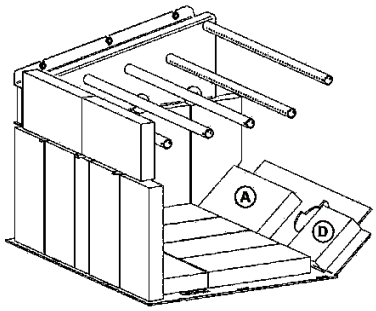

## *Firebricks installation on the pipes.*

The firebricks must be put on the 4 pipes from the bottom of combustion chamber. Bricks keep a maximum of heat inside the combustion chamber and help the air ratio to burn the most of wood pollution gas made by wood steam and wet wood.

Put the rockwool above the brick, it prevent leakage between the bricks and keep a maximum heat inside combustion chamber. It must cover up all the bricks and the each side of top of the air corridor.

**IMPORTANT:** The rockwool must not obstruct the smoke exit way. Check in the stove air exit and make sure that is in the good position. Finally, put the half round steel plate above the rockwool see the picture.

1) Put 2 « A » bricks over the last two top pipes and push it to the back brick. Be sure to eliminate any gap space between the back bricks previously placed and the brick you install.

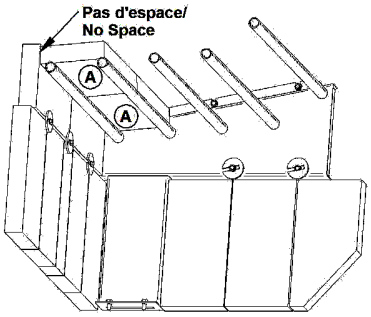


2) Put four (4) bricks « A » over the two front pipes. It must be placed like the illustration. Be sure to eliminate any gap space between back bricks previously placed.

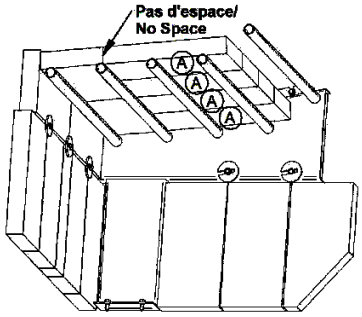


3) Put the rockwool over the bricks and assume then the smoke exit way is not obstructed.

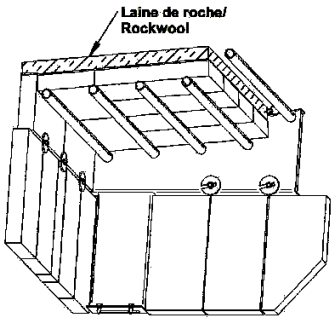


4) Put two half metal disk over the rockwool near the rear deflector already in place.

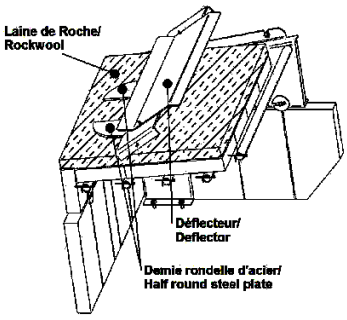

## General stove installation steps.

1) Read the entire owner and installation manual before install and use your stove.
2) Chose a spot where to install your cook stove. Read section about floor protection dimension and about localisation of stove over the floor protection plate, and for combustible material clearance. Once you have decided where to install the stove, mark the roof at the center of chimney
    - To be sure that the vertical center of the chimney is set. Use a plumb line and mark the center on the floor.
3) Check if it possible to pass chimney without damaged the structural integrity of your house, if so, you have to move the location of the stove while keeping the minimum clearance or more to be sure. If you can't move the stove and have to cut through a beam. Be sure to keep the structural integrity of your house by following state of the art and National building code.

Note: This appliance have to be connected to 6 inches (15.24 cm) factory build chimney HT UL 103 or CAN/ULC S629 compliant or a 6 inches (15.24 cm) masonry chimney with a homologated sleeve inside.

4) Install the chimney following the manufacturer instruction.
5) Put the stove directly on the floor aligned vertically with the center of chimney, and trace the side of the stove on the floor and remove it.
6) Trace the protection floor at 8 inches (20.3 cm) offset clearance from the side and the back of the stove and then trace the front offset clearance at 16 inches (40.6 cm) In US and 18 inches (45 cm) in Canada. From the front of the door opening.
7) Install the floor protection plate inside the last mark. (It must be non-combustible)
8) Put the stove on the protection floor plate and respect the offset clearance set at step 6. Be sure to centering chimney with the flue collar. We recommend to fix the stove to the floor with bolt in the slot make for that.in the legs.
9) If you have an outside air inlet you must use 4 inches (10.16 cm) flexible aluminum pipe. The pipe must be sealed with thermal resistant sealant
10) Install the chimney connector on the stove collar first and screw it with 3 screws, then continue with the next chimney connector section up to the chimney support collar. Always use 3 screw on each joint section.

Note:

- The single wall or double wall chimney connector must be 6 inches diameter and have a minimum thickness of 24 gauge (0.025 inches 0.64 mm)
- Do not use galvanised steel chimney connector.
- .

# Chimney connector installation.

The chimney connector is a set of single wall or double wall flue pipes and elbow installed between the stove collar and the chimney collar. The single wall chimney connector is sold into any hardware store and are not homologated and certified. Some rules must be followed to install it and can be found in the installation codes for wood heater.

- **Double wall chimney connector.**
  Your J. A. Roby cook stove was design and tested with a single wall chimney connector but it is possible to install a 6 inches (15.2 cm) double wall certified chimney connector. To do that you must detach the blank piece on the top assembly, on the bottom of the facing assembly and on each decorative side of the warmer.

  We recommend to detach the blank pieces before assembling the cook stove warmer

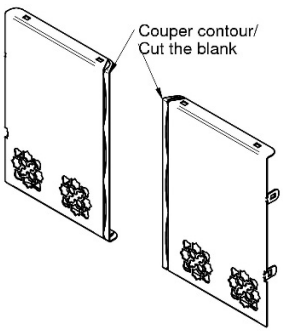


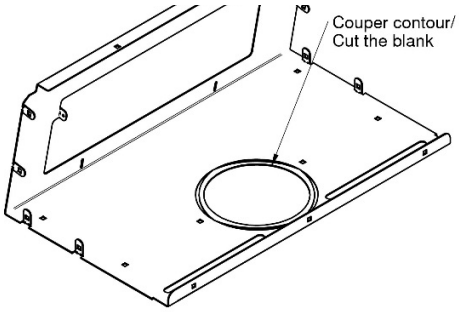


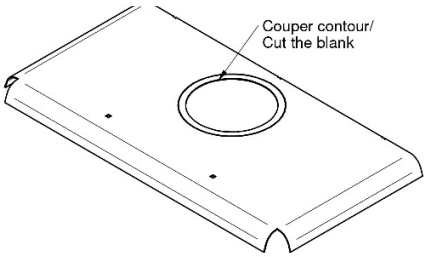


ATTENTION:

- For the clearance between combustible materials and double wall chimney connector, see manufacturer manual.

- **Single wall chimney connector..**

  For the single wall chimney connector you must use The single wall or double wall chimney connector and it must be 6 inches diameter and have a minimum thickness of 24 gauge (0.025 inches 0.64 mm) For the single wall section and elbow outside the warmer. Install a metal heat shield, 1 inches (25.4 mm) offset.

ATTENTION:

- If heat shield is not present you must move away the cook stove to keep 18 inches (45.7 cm) clearance between combustibles materials and  1 the chimney connector.
- Any horizontal section must have a 1/4 inches (6.35 mm) by feet (30 cm) slope toward the chimney collar.
- Clearance between roof and horizontal single wall chimney connector must be 18 inch (45.7 cm) or more.
- Clearance between roof and horizontal double wall chimney connector, follow chimney connector manufacturer indication

1. **Chimney connector assembly installation.**

Make a summary installation of all sections and elbows (if necessary) to ensure that you meet the clearances and inclinations of the horizontal sections and check that you have all the necessary parts to final installation.

- For direct vertical installation you will need.
  - 1 x 24 inches (61 cm) vertical section or more
  - 1 x adequate length of telescopic chimney connector section allowing you to connect the last chimney connector section to the roof support collar.

  Note: More section can be used for higher roof.

- For horizontal run installation you will need
  - 1 x 24 inches (61 cm) vertical section or more.
  - 1 x 90° elbow or 2 x 45°elbow.
  - 1 x adequate length of telescopic chimney connector section to a maximum of 36 inches (91.4 cm)

  Note: For better performance two 45 degree elbow, with or without straight section between the two are preferable.

2. Disassemble the whole thing and start screwing the pieces from the stove to the roof chimney collar

3. Insert entirely the roll formed end into the stove collar and screwing it with a minimum of 3 screws.

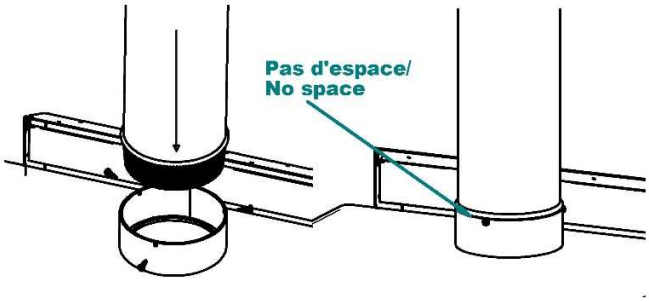


WARNING: It is mandatory to screw the pipe to the stove collar and also at each joints with a minimum of 3 screws.

4. Install all the next section up to the roof chimney support and don't forget to screw the chimney connector to the roof support collar.

**DO NOT CONNECT CONECT THIS UNIT TO A CHIMNEY FLUE SERVING ANOTHER APPLIANCE..**

**CONNECTOR PIPES SHOULD NEVER PASS THROUGH THE CEILING, THROUGH A WALL, IN A CLOSET, IN AN ATTIC OR OTHER ENCLOSED AREA THAT COULD CAUSE HEAT BUILDUP. IF YOU NEED TO PASS THROUGH COMBUSTIBLE MATERIAL, MAKE SURE THAT YOUR INSTALLATION COMPLIES WITH CAN / CSA-B365.**

.

## Mobile home installation.

**DANGER: DO NOT INSTALL IN SLEEPING ROOM.**

**WARNING: THE STRUCTURAL INTEGRITY OF THE MOBILE HOME FLOOR, WALL, AND CEILING/ROOF MUST BE MAINTAINED.**

1) Do the General stove installation steps 1 to 11.

2) The following requirement are MANDATORY for installation in a mobile home.
   a. The stove must be fixed onto floor of mobile home with bolt and nuts
   b. The exterior air intake must be install.
   c. The stove must be grounded with #8 electrical wire to chassis of the mobile home Use of round terminal and a star washer is mandatory.
   d. All the supply use for installation must be certified and approve for mobile home installation.
      - Double wall chimney connector.
      - The chimney system..
      - The roof flashing
      - The Storm collar
      - Cap with spark arrester
      - Firestop.
      - Chimney ceiling support
      - Decorative collar.
   e. If the chimney exit by a wall and the bottom are less than 7 feet (213 cm) over the ground level. A shield must be install around chimney at 4 inches or more of the chimney, from the bottom to 7 feet (213 cm) tall. If opening are made into the shield they must be less than ¾ inches (2 cm) and far enough to can't touch chimney with finger.
   f. Be sure to keep moisture barrier of the house by seal correctly the firestop, the roof flashing and the exterior air inlet pipe

3) Always keep the door closed and lock. Open it only to add wood or start fire.
4) To close the exterior air inlet, a damper must be installed near the exterior air inlet. Don't forget to open the damper to operate your stove.
5) Always use Certified Parts. Never use a substitute to repair any piece of stove or ant pieces of Chimney and chimney connector..

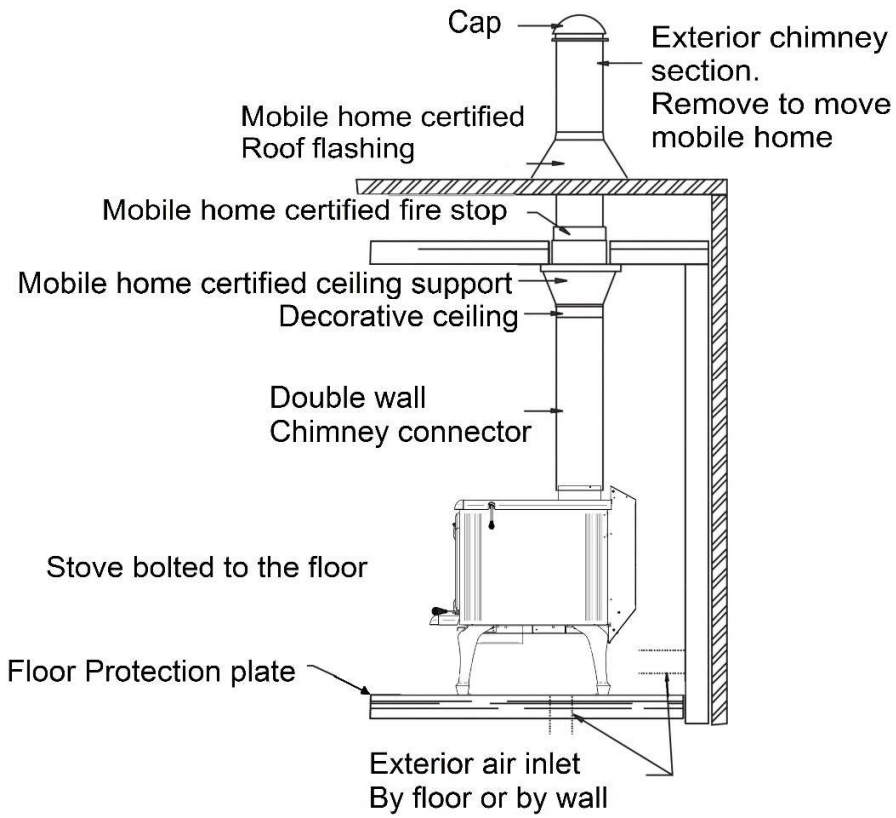

## Chimney installation, General steps

Use only approved chimneys. The same size as the output collar. 6 inches in this case. The chimneys used must be tested according to CAN/ULC S629 M87 in Canada and to UL 103 (type HT) In USA. The Cook stove can be install with a masonry chimney according to ULC S635, ULC S640 and UL 1777. The masonry chimney must be equipped with a stainless steel sleeve and meet the standards for the masonry chimney with inner sleeve.

Provide a place to sweeping.

When possible, it is preferable to avoid an outside chimney or built on an exterior wall, and this is even more important for colder areas. Outside chimneys generally have a less efficient draught. They can even have an inverse draught because it is hard to heat them enough so that they can reach their operating temperature. A greater accumulation of creosote, a less efficient draught and a lesser performance are some characteristics of cold chimneys. Draught is proportional to the total chimney height as well as its temperature. It is therefore possible to get a better draught by increasing the chimney's height and by reducing the heat loss with an insulated lining. The chimney has to be installed with a stainless steel lining. Make sure that all smoke pipe joints are really airtight. A leak reduces the efficiency of the appliance and could even make its utilization dangerous.

**Note: This is a general chimneys installation method. Always refer to the manufacturer's manual of the chimney for a more detailed method for your chimney.**

1) Determine the total length needed for your chimney..
2) Cut the holes into all floor and roof
3) If you need to cut a joist, be sure to strengthen the adjacent joists and frame hole respecting the minimum dimensions to be maintained between combustible materials and the firewall. Follow the manufacturer's instructions in the manual supplied with the firestop. Never cut a structural beam.
4) Frame the holes in each level and attic respecting the minimum distance recommended by the manufacturer's manual of your chimney. And install firestop in each level.
5) Frame the hole into the roof.
6) Install the chimney support at the ceiling where Cook stove is installed.
7) Stack and lock the prefabricated chimney section on the support and above the roof.

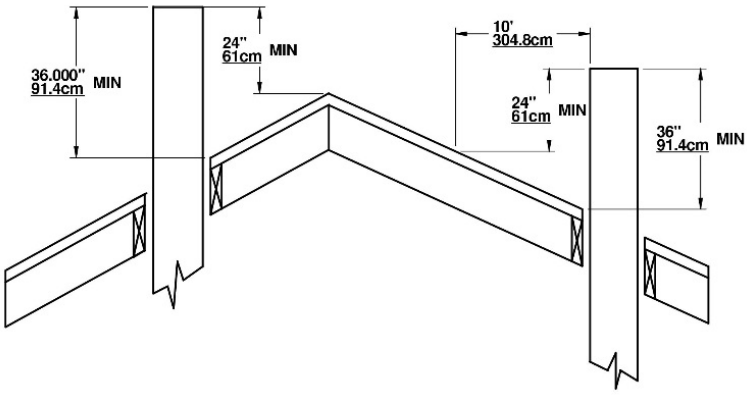


- The chimney must be over 36 inches (91.4 cm) over the higher point into the roof opening.
- The chimney must also be 24 inches over the highest point on the roof inside 10 ft (304 cm) radius around chimney.
- The minimum length of chimney is 12 feet (365.8 cm).

- **ATTENTION: Be sure the chimney section are lock together and lock onto the chimney support.**
- **Note: More lengthen chimney than the minimum can add more draft and help to the good working operation of the cook stove Try the minimum length first then add section if you need more draft.**

8) Put the roof flashing over the chimney and seal it with roof caulking.
9) Nail roof flashing, and reinstall roof covering.
10) Slide the storm collar over the chimney and seal it with high temperature caulking.
11) Lock the chimney cap and install the spark arrestor if necessary

## Inside Masonry Chimney, Vertical Installation

The wood appliance must be installed in accordance with the applicable local laws or the CAN/CSA-B365, NFPA211 (USA) norms. Follow the chimney manufacturer's instructions to install the chimney.

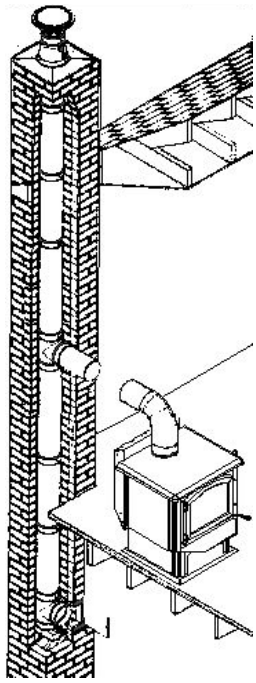

## Outside Vertical Installation.

The wood appliance must be installed in accordance with the applicable local laws or the CAN/CSA-B365, NFPA211 (USA) norms. Follow the chimney manufacturer's instructions to install the chimney.

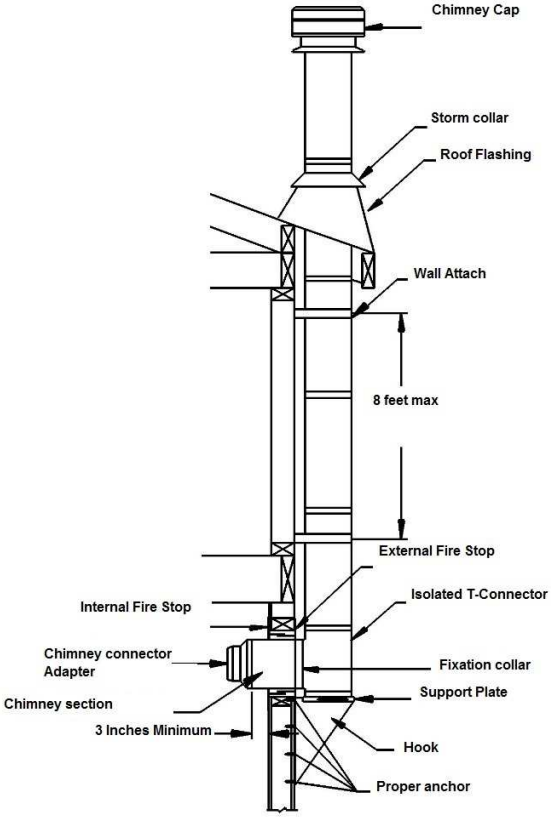


## Cathedral Vertical Installation

The wood appliance must be installed in accordance with the applicable local laws or the CAN/CSA-B365, NFPA211 (USA) norms. Follow the chimney manufacturer's instructions to install the chimney

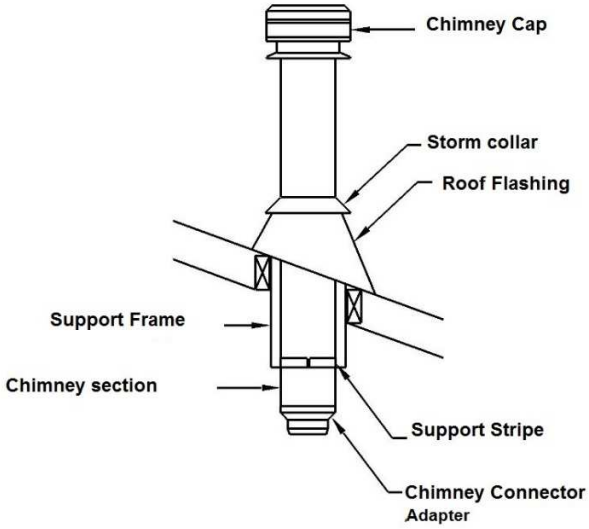


## Offset Installation

The wood appliance must be installed in accordance with the applicable local laws or the CAN/CSA-B365, NFPA211 (USA) norms. Follow the chimney manufacturer's instructions to install the chimney.

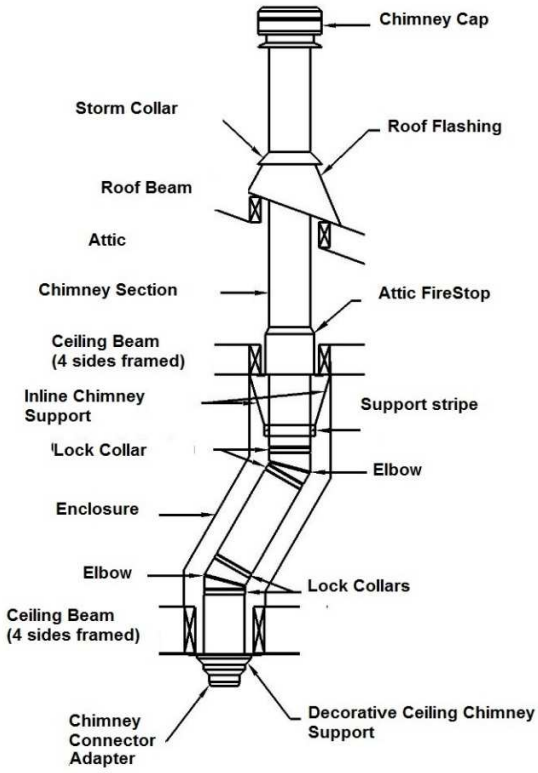

# Vertical Installation

The wood appliance must be installed in accordance with the applicable local laws or the CAN/CSA-B365, NFPA211 (USA) norms. Follow the chimney manufacturer's instructions to install the chimney..

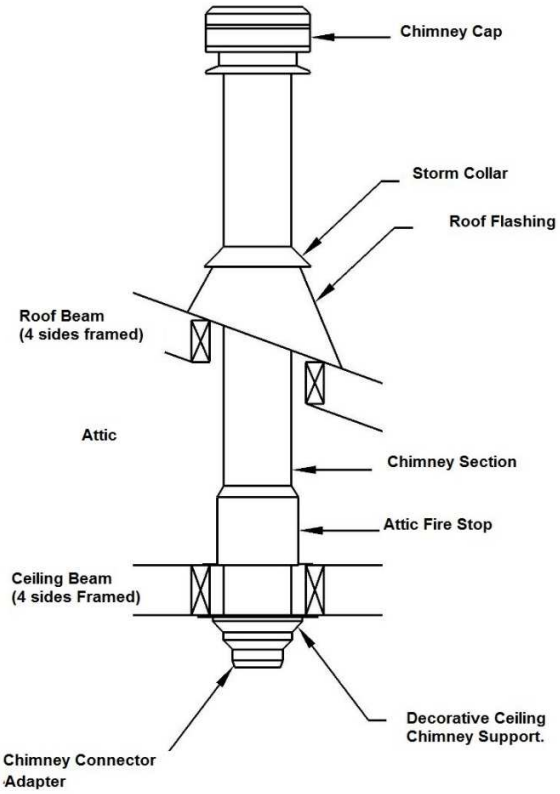


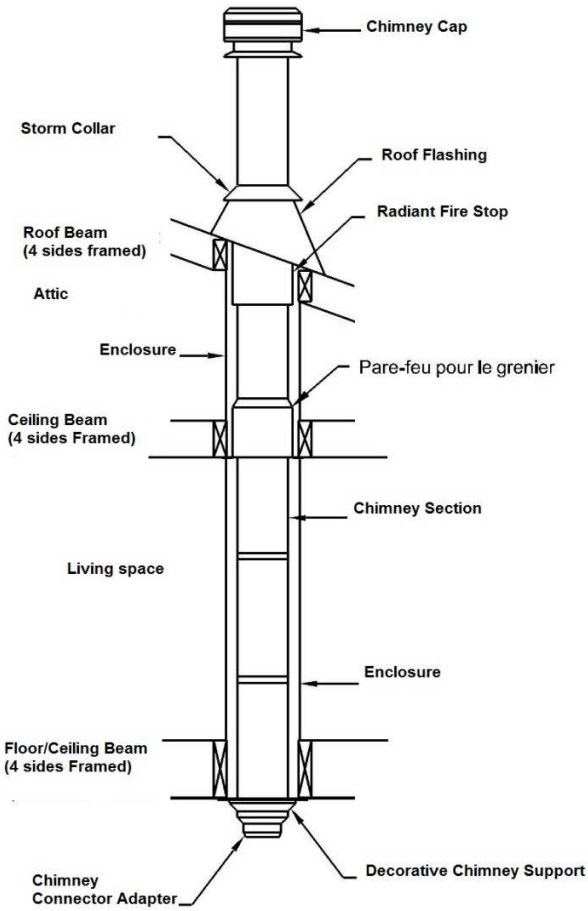

# External combustion air source.

In conventional designed house, natural ventilation is enough to operate the wood stove.

In some new energy saving house, natural ventilation is not enough to good operation of your stove. To avoid reverse circulation of smoke caused by negative pressure when turning on some fan like: Bathroom fan, Cooking fan or a drying machine. Open slightly a window in the same room than the appliance to compensate the depressurisation, or install exterior air inlet.

A mobile home on a foundation is considered like a conventional house.

## Exterior Air Intake pipe.

This appliance is certified for the mobile home installation. It have an external factory built external air intake under the stove and can be use also for internal air intake.

We recommend to use a 4 inches (10.7 cm) aluminum flexible pipe, a damper and a caped air inlet equipped with grate

Other pipe material must be complied with ULC-S110 norms or UL-181 Class1 norms, equipped with thermal resistant isolation and must be corrosion resistant

## Installation of Air Intake Pipe.

1) To install the exterior air intake pipe, find the hole under the cook stove back and fold the 3 tabs outside the Intake box. Insert the pipe into the hole and screw the pipe using the 3 holes in the tabs. Put a generous layer of high temperature latex caulking onto the joint to ensure the pipe is sealed.
2) Cut the exterior wall and install Air Inlet kit following the manufacturer installation instructions. Be sure to seal it correctly to preserve the vapour barrier of your house.
3) Install a small rigid section with a damper onto the interior end of the Air Inlet (The damper is to reduce the cold air circulation into the stove when it is not in service.)
4) Plug the flexible air inlet pipe onto the damper section and seal it.
5) Put a thermal resistant isolation onto the pipe if the pipe is not isolated.

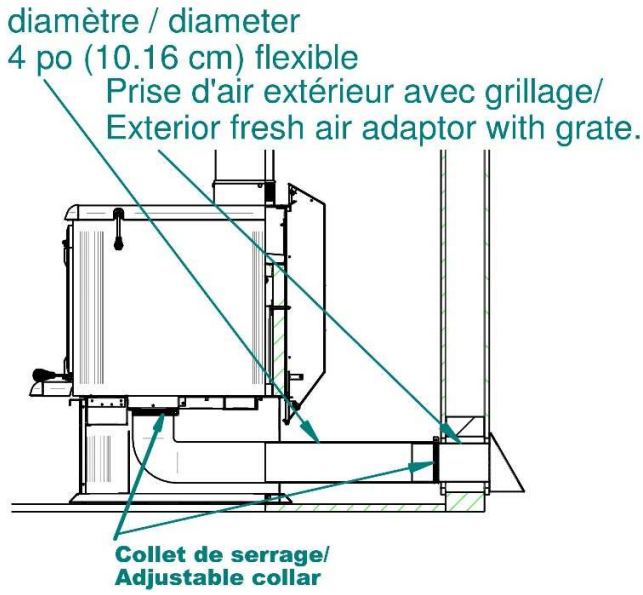


## Air Inlet Obstruction

If the stove extinguish after closing is door, it's possible than the air inlet is obstruct by something.
After a long unused period, insects or animals can build a nest into the air inlet.
In winter, after a storm, snow can accumulate over the air inlet and obstruct it.

Before warming season, always inspect air inlet pipe to be sure nothing is obstructed the outside air inlet.

# Stainless steel deflector replacement.

Add-on stainless-steel plate are used into combustion chamber to protect the steel from wear corrosion cause by extreme temperature and extreme conditions into combustion chamber.

When it's too wear they have to be replaced.

## *Back Deflector replacement.*

Remove the rockwool and the two half round plate.

Also remove the 3 back tube (see Stainless steel tube replacement section)

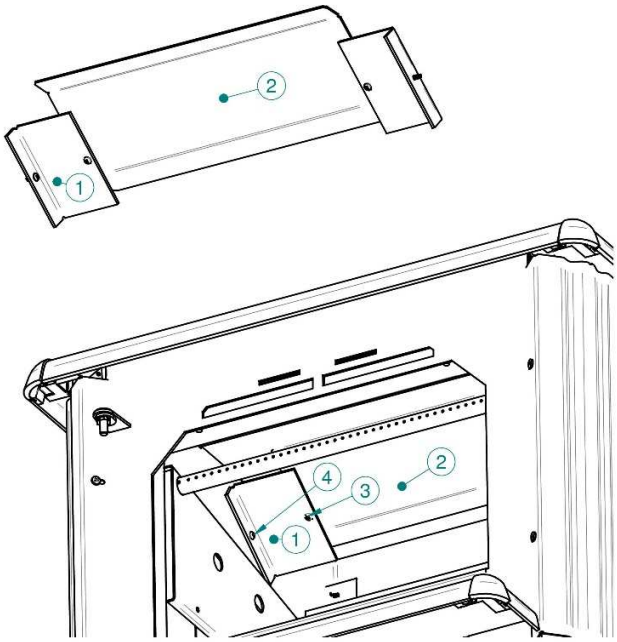


.

Uninstall Old back deflector and the two lateral supports (#1,#2)

- Remove the screw holding the deflector (#3)
- Remove the screws holding the lateral support (#4)

Install the new back deflector.

- Install the new lateral support (#1,#4)
- Install the new stainless steel deflector(#3)

Install disassembled tube, rockwool and half round plate. Following instruction into the stainless steel tubes replacement section..

## *Front deflector Add-on Replacement.*

Remove the rockwool, half round plate, and the 2 front tubes.(see Stainless steel tubes replacement section.

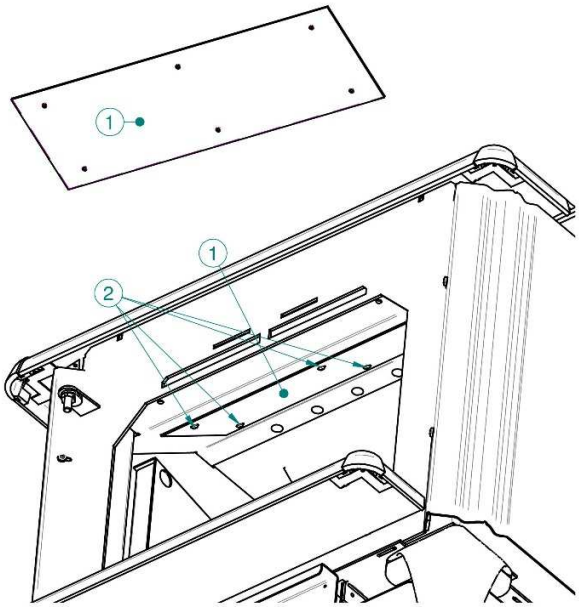


Replacement of the add-on deflector.

- Remove all the screws of the add-on stainless steel deflector.
- Install the new deflector and screw it in place. Pay attention to put all screw.
- Install previously disassembled tube, rockwool and half round plate. Following instruction into the stainless steel tubes replacement section.

## Stainless steel tubes replacement.

Although the tubes are in stainless steel. With extreme temperature and conditions the tubes are eventually corroding and perforating by normal deterioration. They must be replaced by a new one to ensure performance of your stove.

## Stainless steel tubes Installation.

Two type of tubes is used into the stove. Three of this are a single holes perforation and are in the back of heat chamber. The front heat chamber is covered by the two other and are double sided perforated

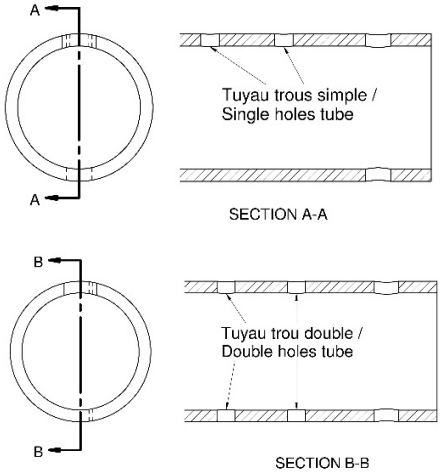


To ensure proper tubes orientation, a groove is cut at one end of tubes, and a corresponding emboss is cut into the hot air side channel.

Step to install a tube.

1) Insert the tube into the round hole into the hot air side channel.

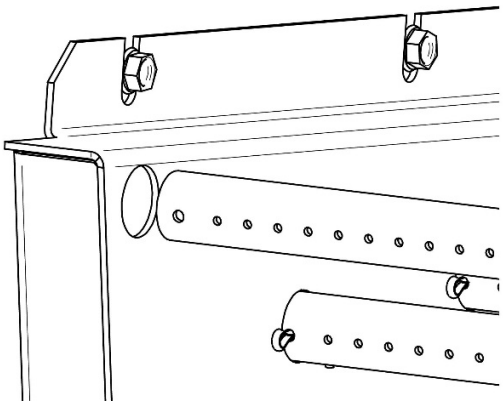

2) Align and insert the groove into the other side.

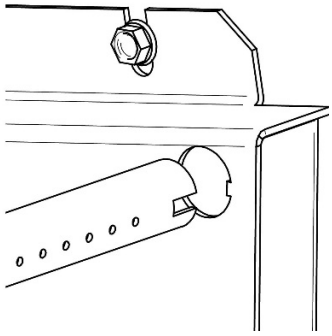

3) Push completely the grooved end and insert the cotter pin into the last hole at the other side.

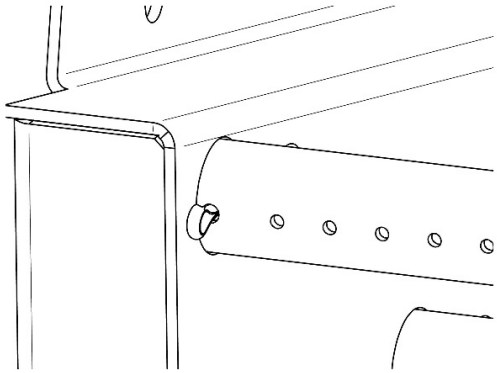

.

4) Split the cutter pin to lock it
5) Install the next tube

To remove tubes, do steps in reverse order

# Operating Instructions

## Primary and secondary air admission control.

When the handle on the left side of the stove is vertical the air admission is from the tube only, this is what we called "Secondary air admission". Else when the handle is horizontal the air admission is direct and from the top of the door opening, this is what we called "Primary air Admission"

**Warning: Operate stove with the Primary air admission fully open for a long period of time, can damage the stove.**

**IS PROHIBITED TO MODIFY AIR ADMISSION TO OBTAIN A BRIGHT FIRE OR FOR ANY OTHER REASON. MODIFICATION CAN AVOID GUARANTEE.**

## Lightning fire.

After installing correctly the stove following the installation instruction of the manufacturer, you are ready to light it.

1) Turn the admission handle in horizontal position to set the primary air admission.
2) Be sure to close all cooking holes
3) Turn the deviation knob in the non-cooking position
4) Put paper and lightning wood into the combustion chamber like your preferred disposition and light it
5) Close partially the door keeping a slight opening. When chimney have enough heat buildup close completely the door and lock it. Wait for a good fire buildup.
6) Once you have an ember fire, it's time to add logs. Follow now the instruction section on how to keep a fire

**DO NOT OVER CHARGE THE STOVE OVER THE UPPER BRICK ROW**

You can control the combustion by turning up or down the handle. The wood will burn more rapidly when more primary air is set. Otherwise the wood burn more slowly and more efficiently with the handle set to secondary air. You can balance the primary and secondary air to have more heat, to cook.

**Warning: Operate stove with the Primary air admission fully open for a long period of time, can damage the stove.**

**NEVER LEAVE THE STOVE UNATTENDED WHEN THE DOOR IS SIGHTLY OPEN. ALWAYS CLOSE THE DOOR AFTER LIGHTNING.**

**CAUTION: NEVER USE GAZOLINE, GAZOLINE TYPE LANTERN FUEL, KEROSEN, CHARCOAL LIGHTER FLUID, OR SIMILAR LIQUIDS TO START OR "FRESHEN UP "A FIRE IN THIS HEATER. KEEP ALL SUCH LIQUIDS WELL AWAY FROM THE HEATER WHILE IT IS USE..**

## First fire.

The first hours of operation, you must heat it gradually. In order to allow an appropriate cooking of the paint and in order to facilitate its adhesion with metal, do not heat the appliance with a strong fire. It will also avoid thermal shock which could lift up the paint or make it whiten.

Make sure that the room is ventilated enough in order to eliminate the odours and the smoke coming from the paint during the first hours of utilization. It is normal that a light smoke is released from the paint during the first hours of use.

Even if this nuisance is temporary, open the windows and the doors in order to ensure a good ventilation. This special paint is conceived to tolerate temperatures until 1200°F (650°C).

## Keep a fire.

To add firewood into the stove and keep a fire.

5) Turn the handle to horizontal position and wait a few second to let the fire adjusting to the new conditions..
6) Open the door handle to the first position and wait a few second to balance pressure to avoid fume to escape from stove
7) Wide open slowly the door.
8) Move embers with poker near to the door to oxygen it and make it burned completely
9) Add firewood over the ember, keeping it away from the glass door to avoid flame touching the ceramic glass.

**DO NOT BUILD A FIRE TOO CLOSE OF THE WINDOW.**

10) Close the door slightly and wait to be sure the wood is burning.
11) One the wood is burning close and lock the door.
12) Adjust the air admission handle to needed setting.

**NEVER LEAVE THE STOVE UNATTENDED WHEN THE DOOR IS SIGHTLY OPEN. ALWAYS CLOSE THE DOOR AFTER ADDING A LOAD.**

**CAUTION: NEVER USE GAZOLINE, GAZOLINE TYPE LANTERN FUEL, KEROSEN, CHARCOAL LIGHTER FLUID, OR SIMILAR LIQUIDS TO START OR "FRESHEN UP "A FIRE IN THIS HEATER. KEEP ALL SUCH LIQUIDS WELL AWAY FROM THE HEATER WHILE IT IS USE.**

## Fans Controls.

The switch on the snap disc box is only to power up and down the fan

On power up position the fan is control by a snap disc factory set to 120 Fahrenheit (49 ° Celsius)

On Off Position all the fans shut down.

**NEVER ROUTE THE ELECTRIC WIRE OF FANS IN FRONT OR UNDER APPLIANCE**

# Maintenance.

## Ash Removal.

The wood burning make some residual called ash and must be remove from the combustion chamber to help oxygen circulation

The ash have to be removed periodically every 2 or 3 days into heavy warming period. Never had excessive accumulation into the combustion chamber because it can reduce performances of your stove by diminish the air circulation between logs.

The best time to remove ash is after a long warming period like morning when the stove is relatively cold enough to manipulate ash and the chimney is yet hot. The hot chimney draft will vacuum the dust inside the stove.

To clean combustion chamber from ash you must have the following tool.

- Ash shovel
- Ash brush.
- A metal bucket with airtight lid.

Some embers is mix with ash and still lit a few hours or a few days. Is very important than the metal lid was airtight. The bucket must be put on a non-combustible tile or brick.

The stove is equipped with an ash drawer and it closed by a cast plug with a fiberglass cord. The plug is into the combustion chamber between two brick in front of the stove.

1) Remove with the shovel the most ash you can and put it into the metal bucket
2) Remove with the ash brush embers and ash recovering the plug.
3) Turn clockwise the plug and pull it.

**Warning: if the fire is extinguish recently, the plug must be hot. Use isolated mitt or a plier to turn and pull the plug.**

**4)** Push embers and ash into the ash drawer. **Do not overcharged the ash drawer.**
5) Empty the ash drawer into the Metal bucket. **Never left ash and embers into the ash drawer**. Some embers can be lit and make fumes.
6) Clean around the plug to be sure the plug will be airtight.
7) Reinstall plug by pushing it into the hole and turn counter clockwise to lock it in place and be sure it is airtight.

<u>A plug leakage can let pass oxygen and reduce the combustion time. Please inspect the plug seal and change it if you note some damage.</u>

## Ash Disposal.

Some embers is mix with ash and can still lit. If embers have enough oxygen it can still lit some hours and so some few days.

It's mandatory to store ash pending disposal:

- Into a metal container with an airtight metal lid correctly closed
- Outside the house on a non-combustible material.
- Far enough any combustible material.
- Far enough any inflammable liquid and vapor.
- Enough long to be thoroughly cooled.

If the ash are disposed of by burial in soil or otherwise locally dispersed, they should be retained in the closed container until all cinders have thoroughly cooled.

**NEVER PUT TRASH INTO THE ASH CONTAINER**

## Creosote Formation.

When wood is burning slowly, it produces tar and other organic vapors, which combine with expelled moisture to form creosote. The creosote vapor condense in the relatively cool chimney flue of a slow-burning fire As a result, creosote residue accumulates on the flue lining, When ignited this creosote makes an extremely hot fire

The chimney connector and chimney should be inspect at least once every two months during the heating season to determine if a creosote buildup has occurred.

## Chimney Inspection.

Wood moisture, wood species, the combustion quality, are some factors that can influence creosote buildup speed into chimney and chimney connector.

The chimney and the chimney connector must be inspected at least one every two month during the warming season. You can call a Chimney sweeper to evaluate the creosote formation or you can do it yourself by extinguish the wood stove, wait for cool down. Then unscrew the chimney connector and inspect the chimney connector and the factory build chimney with a spot light to see if a creosote buildup as occurred. For a masonry chimney insert a mirror in the cleanout opening at the bottom at the bright day. For an outdoor factory build chimney open the cap at the bottom of chimney.

A 1/8 inches (3 mm) or more creosote buildup, smaller apparent diameter and if you cannot see the chimney cap. It's a sign that is time to sweep your chimney connector and your chimney to remove creosote.

## Chimney Sweeping.

Chimney Sweeping need a special tool like some fiberglass rod an adapted diameter brush and some rope

Sweeping chimney also requires to climb on the roof to remove the chimney cap and sometime a too high chimney section too.

We recommend to call a Professional chimney Sweeper certified by APC in Quebec, the WETT in the rest of Canada or by NFI in United States.

## Door care.

The door is the mobile element that need a special attention. Its tightness is primordial. One of the first signs of wear braided fiberglass rope is the white soot seems to stick on the glass located where the air leak.

## Air Tighten Adjustment.

If the braided fiberglass rope still seems good enough and little flatten it need probably to be tighten

### *Door adjustment (hinges side).*

**Important:** To keep squareness of the door Keep the door locked and loosen only one hinge at a time..

1) Loosen lightly upper hinge
2) Push the door right beside the upper hinge to tighten the braided fiberglass rope. Then tighten the hinge.
3) Loosen lightly lower hinge.
4) Push the door right beside the lower hinge to tighten the braided fiberglass rope. Then tighten the lower hinge.
5) Open the door and insert a piece of paper between the frontage of stove and the braided fiberglass rope and close it.
6) If the paper easily slide when you pull it, do steps 1 to 5 another time.
7) If after some try the piece of paper slide easily. The braided fiberglass rope must be changed.

### *Door adjustment (right side)*

This side adjustment is do with the screw under the door near the hook hole..

1) Unlock and open the door.
2) With a screwdriver turn clockwise the adjustment screw a quarter turn.
3) Put a piece of paper between the frontage of stove and braided fiberglass rope and close and lock the door.
4) If the paper easily slide when you pull it, do steps 1 to 3 another time.
5) If the door side touch the frontage of the stove and the piece of paper slide easily. The braided fiberglass rope must be changed.

On some version of stove two screw is for retain the door.

## Cleaning up glass

To clean the glasses, J.A. Roby Inc. recommends using products sold for this purpose or an oven cleaner avoiding touching paint part.

- Avoid cleaning with abrasives or when the glass is hot. Cleaning glass when is hot can cause a thermal shock and broken the glass.

## Uninstalling and installing door.

To uninstall keep the lower hinge tighten.

1) Keep the door lock.
2) Untighten the upper hinge without remove the nut.
3) Unlock the door and carry it while open.
4) Tilt the door off the upper hinge
5) Lift the door off the lower hinge..

Installing the door.

1) Insert the bottom hinge
2) Close the door align it and lock it.
3) Tighten the upper hinge then align the washer with the hinge support.
4) Do the air tighten adjustment.

## Broken glass replacement.

**WARNING: NEVER OPERATE STOVE WHEN THE GLASS IS BROKEN OR CRACK**

Replace only with a 5mm ceramic glass with the right shape.

**DO NOT USE SUBTITUTE**

Steps to replace glass.

1) Loosen partially the screws retaining the four glass supports. And remove the support. (On the cook stove door remove completely the screw.)
2) Remove the broken glass and all pieces of broken glass. And clean the door.
3) Stick the flat fiberglass rope around the glass without pulling it excessively. A sticking side is already on the flat rope.
4) Install the new glasses and put the lower support first and gently tighten screw. Tighten it too much can make a pressure point and can break the glass when it became hot.
5) Install the top support and gently tighten screw
6) Check the tightening Tighten it too much can make a pressure point and can break the glass when it became hot

If you cannot replace glass in place you may have to remove the door to make it. Look in this manual to know how.

## Fiberglass rope replacement.

Use a ½ inches (12.7mm) braided fiberglass rope.

It is possible to replace the braided fiberglass rope with the door on the stove, but if you want you can remove door.

### *Fiberglass rope preparation.*

1) Take the end of the fiberglass rope and push fiber inside to make a clean end.
2) Add little touch of high temperature latex inside the end of the fiber glass rope.
3) Remove old fiberglass rope and clean the groove
4) Starting at the lower corner near the hinge put the fiberglass rope into the grove without giving any tension and cut it ½ inches over the require length
5) Take the fresh cut end of the fiberglass rope and push the fiber inside to make a clean end.
6) Add high temperature latex inside the end of fiberglass rope.

### *Fiberglass rope installation.*

1) Put a high temperature latex inside the clean groove to glue the fiberglass rope.
2) Starting at the lower corner near the hinge put fiberglass rope into the groove without giving any tension

3) Align the two fiberglass rope ends and put some high temperature latex between. .
4) Install the door if you uninstall it

## What to do in case of Chimney Fire.

Contact your local authority to know what to do in case of Chimney fire. And be sure to know procedure in case of chimney fire.

1. Close all door and put the handle to secondary position.
2. Close damper
3. Spay water on combustible material around stove.
4. Call Fire department and trigger alarm.
5. Never touch the chimney while is burning.
6. Do an inspection to chimney and repair it when needed.

.

## Annexe 1

Door assembly

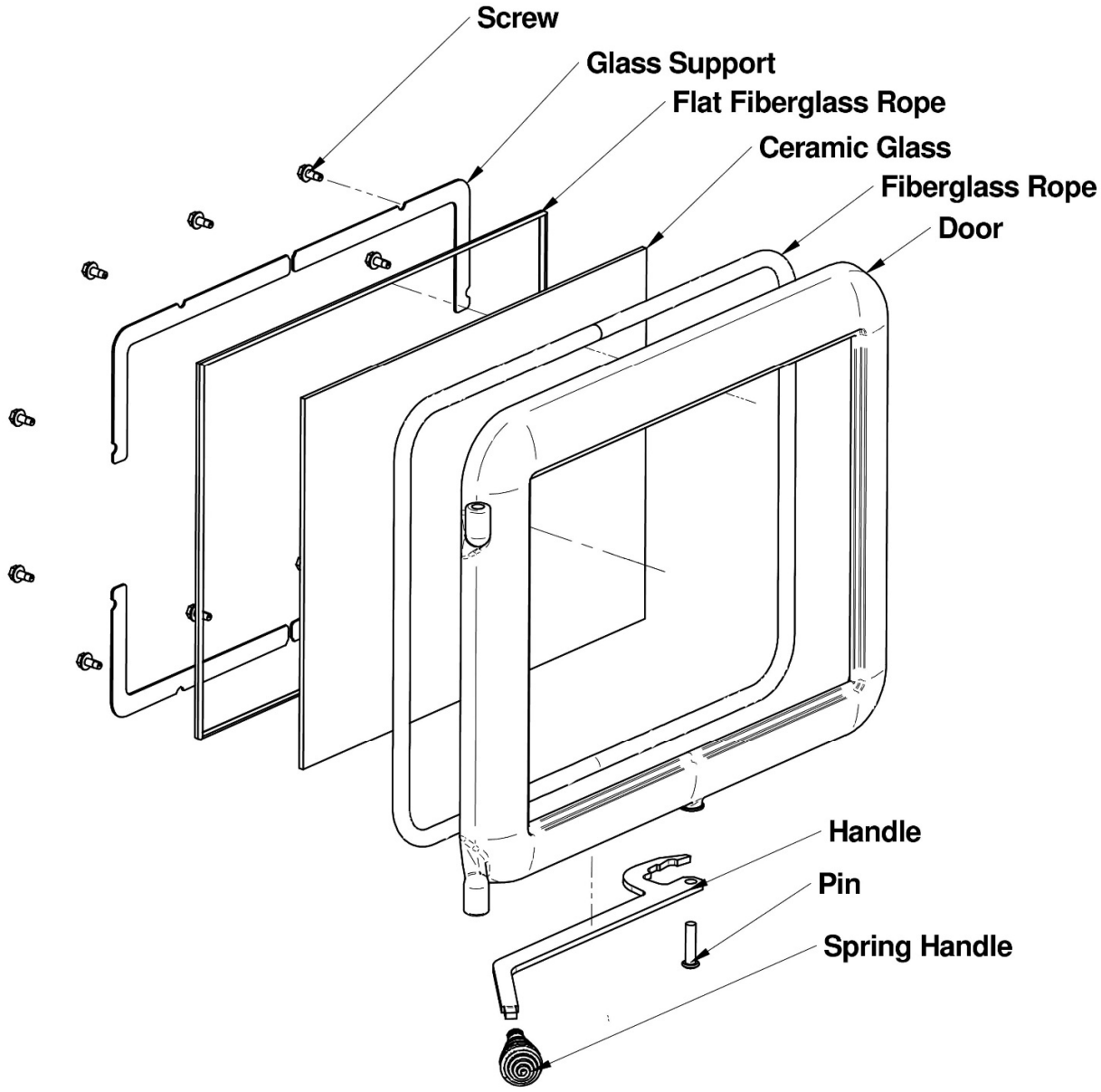

# Annexe 2

## Parts that can be replaced

- Bricks
- Stove ceramic glass
- Spring Handle
- Stove Door
- Fans
- Flat fiber glass rope (around glass)
- Round fiberglass rope
- Ash Plug
- Slotted Brick Washer

To ordered parts call your stove seller representative.

STOVES & FIREPLACES

LIMITED LIFE WARRANTY

# J. A. ROBY LIMITED LIFE WARRANTY

WOOD BURNING STOVES & FIREPLACES

J. A. ROBY's warranty only applies to original buyer and is non-transferable. This warranty covers brand new products only, which have not been altered, modified nor repaired since shipment from factory. The products covered by this warranty must be manufactured after review date indicated at the bottom of page. Proof of purchase (dated bill of sale), model name and serial number must be supplied when making any warranty claim to your J. A. ROBY dealer. Registered your warranty is not required.

The appliance must be installed by an authorized service technician or contractor. Installation must be done in accordance with the installation instructions included with the product and all local and national building and fire codes. Any service call related to an improper installation is not covered by this warranty. This warranty applies to normal residential use only. This limited warranty does not cover damages caused by misuse, improper installation, lack of maintenance, accident during transportation, alterations, power failure, venting problems, downdrafts, abuse, over firing or neglect. Operating the appliance on high for extended periods of time is neglect. Any defect or damage caused by the use of unauthorized parts or others than original parts void this warranty.

This limited warranty does not cover any scratch, corrosion, warping or discoloration. The manufacturer may require that defective products be returned and/or that digital pictures be provided to support the claim. Returned products are to be shipped prepaid to the manufacturer for investigation. If a product is found to be defective, the manufacturer will repair or replace such defect. The transportation fees to ship back the product to the purchaser will be paid by the manufacturer[2]. The external labour fees related to warranty repair are not covered. The manufacturer may at its discretion, decide to repair or replace any part or unit after inspection and investigation of the defect. The manufacturer may at its discretion, fully discharge all obligations with respect to this warranty by refunding to the original warranted purchaser the wholesale price of any warranted but defective part (s). The manufacturer shall not in no event be liable for any special, indirect or consequential damages of any nature whatsoever which exceeds the original purchase price of the product. All parts replaced under this limited life warranty are subject to a single claim.

Any damage to the appliance, combustion chamber, heat exchanger, enameled cast iron cooking plate or other components due to water, weather damage, long periods of dampness, condensation, damaging chemical or cleaner will not be the responsibility of J. A. ROBY. Failure of any components which is attributed to poor maintenance, is not warrantable and will not be covered by this policy. J.A. ROBY neither assumes, nor authorizes any third party to assume, on its behalf, any other liabilities with respect to the sale of this product.

The manufacture of your new appliance and the following materials are warranted against defects as mentioned below:

| WARRANTY DESCRIPTION | 100% | 50% current retail price |
|---|---|---|
| Ashtray, handles, doors and cast iron legs | Life | |
| Combustion chamber | 5 years | From 5 years to life |
| Secondary air tubes | 5 years | |
| Heat exchanger | 2 years | From 2 years to life |
| Switches, thermodisc, wiring and electrical components, standard blowers and rheostat | 2 years | |
| Tempered glass, optional blower and gasketing | 1 year | |
| Ceramic glass (thermal breakage only[1]) | 1 year | |
| Replacement parts (with proof of purchase) | 90 days | |

Due to on-doing product improvements, all specifications and design are subject to change without prior notice.

**Before shipping your unit or defective component to our plant, you must obtain from J. A. ROBY dealer an authorization number. Any merchandise shipped to our plant without authorization will be refused automatically and returned to sender.**

**1**= Digital pictures required **2**= Shipping cost are not covered outside CANADA Review oct. 2014