INSTALLER: LEAVE THIS MANUAL WITH THE APPLIANCE.
CONSUMER: RETAIN THIS MANUAL FOR FUTURE REFERENCE.
NEVER LEAVE CHILDREN OR OTHER AT RISK INDIVIDUALS ALONE WITH THE APPLIANCE

NAPOLEON®
QUALITY FIREPLACES

INSTALLATION AND OPERATING INSTRUCTIONS

CERTIFIED UNDER CANADIAN AND AMERICAN NATIONAL STANDARDS: CSA 2.22, ANSI Z21.50 FOR VENTED GAS FIREPLACES.

BGD42CFN
NATURAL GAS

BGD42CFP
PROPANE

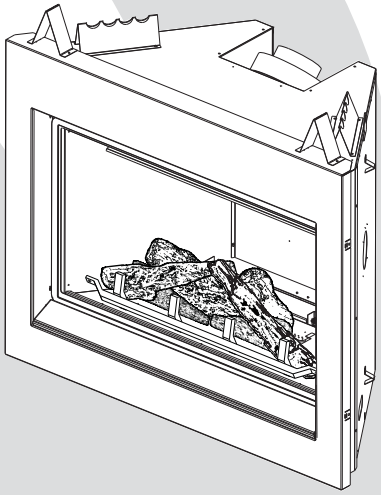

CERTIFIED FOR CANADA AND UNITED STATES USING ANSI/CSA METHODS.

SAFETY INFORMATION

WARNING

If the information in these instructions are not followed exactly, a fire or explosion may result causing property damage, personal injury or loss of life.

- Do not store or use gasoline or other flammable vapors and liquids in the vicinity of this or any other appliance.
- WHAT TO DO IF YOU SMELL GAS:

- **Do not try to light any appliance.**
- **Do not touch any electrical switch; do not use any phone in your building.**
- **Immediately call your gas supplier from a neighbour's phone. Follow the gas supplier's instructions.**
- **If you cannot reach your gas supplier, call the fire department.**

- Installation and service must be performed by a qualified installer, service agency or the supplier.

This appliance may be installed in an aftermarket, permanently located, manufactured home (USA only) or mobile home, where not prohibited by local codes.

This appliance is only for use with the type of gas indicated on the rating plate. This appliance is not convertible for use with other gases, unless a certified kit is used.

WARNING

HOT GLASS WILL CAUSE BURNS.

DO NOT TOUCH GLASS UNTIL COOLED.

NEVER ALLOW CHILDREN TO TOUCH GLASS.

APPLY SERIAL NUMBER LABEL FROM CARTON

Serial No. XXXXXX000000
MODEL NO.

HPBA Hearth, Patio & Barbecue Association

GO GREEN ECO-FRIENDLY TECHNOLOGY

Quality System Certified To ISO 9001-2008

ETL LISTED C US Intertek

Wolf Steel Ltd., 24 Napoleon Rd., Barrie, ON, L4M 0G8 Canada /
103 Miller Drive, Crittenden, Kentucky, USA, 41030
Phone (705)721-1212 • Fax (705)722-6031 • www.napoleonfireplaces.com • ask@napoleonproducts.com

TABLE OF CONTENTS

1.0	INSTALLATION OVERVIEW	3
2.0	**INTRODUCTION**	**4**
2.1	DIMENSIONS	5
2.2	GENERAL INSTRUCTIONS	5
2.3	GENERAL INFORMATION	6
2.4	RATING PLATE INFORMATION	7
3.0	**VENTING**	**8**
3.1	VENTING LENGTHS AND COMPONENTS	8
3.2	TYPICAL VENT INSTALLATIONS	10
3.3	SPECIAL VENT INSTALLATIONS	11
3.3.1	PERISCOPE TERMINATION	11
3.4	VENT TERMINAL CLEARANCES	12
3.5	VENT APPLICATION FLOW CHART	13
3.6	DEFINITIONS	13
3.7	ELBOW VENT LENGTH VALUES	13
3.8	HORIZONTAL TERMINATION	14
3.9	VERTICAL TERMINATION	16
4.0	**INSTALLATION**	**18**
4.1	WALL AND CEILING PROTECTION	18
4.2	HORIZONTAL INSTALLATION	19
4.3	VERTICAL INSTALLATION	20
4.4	USING FLEXIBLE VENT COMPONENTS	20
4.4.1	HORIZONTAL AIR TERMINAL INSTALLATION	21
4.4.2	VERTICAL AIR TERMINAL INSTALLATION	22
4.4.3	APPLIANCE VENT CONNECTION	23
4.5	VERTICAL THROUGH EXISTING CHIMNEY	24
4.6	MOBILE HOME	25
4.7	GAS INSTALLATION	26
4.8	OPTIONAL WALL SWITCH INSTALLATION	26
5.0	**FRAMING**	**27**
5.1	MINIMUM CLEARANCE TO COMBUSTIBLES	29
5.2	INSTALLING STANDOFFS	30
5.3	MINIMUM ENCLOSURE CLEARANCES	30
5.4	ALCOVE FRAMING	32
5.5	MINIMUM MANTEL CLEARANCES	33
6.0	**FINISHING**	**34**
6.1	DOOR INSTALLATION / REMOVAL	34
6.2	REMOVING THE VALVE ACCESS DOOR	34
6.3	DOOR TRIM	35
6.4	GRATE INSTALLATION	35
6.5	LOG PLACEMENT	35
6.6	GLOWING EMBERS	36
6.7	CHARCOAL EMBERS	36
6.8	VERMICULITE	36
6.9	CHARCOAL LUMPS	36
6.10	LOGO PLACEMENT	36
7.0	**OPTIONAL BLOWER INSTALLATION**	**37**
7.1	ACCESSING THE BLOWER	37
7.2	INSTALLING THE BLOWER	38
8.0	**OPERATION**	**39**
9.0	**ADJUSTMENTS**	**40**
9.1	PILOT BURNER ADJUSTMENT	40
9.2	VENTURI ADJUSTMENT	40
9.3	FLAME CHARACTERISTICS	41
9.4	RESTRICTING VERTICAL VENTS	41
10.0	**MAINTENANCE**	**42**
10.1	CARE OF GLASS	42
10.2	GLASS / DOOR REPLACEMENT	43
11.0	**REPLACEMENTS**	**44**
12.0	**TROUBLESHOOTING**	**47**
13.0	**WARRANTY**	**49**
14.0	**SERVICE HISTORY**	**50**

NOTE: Changes, other than editorial, are denoted by a vertical line in the margin.

1.0 INSTALLATION OVERVIEW

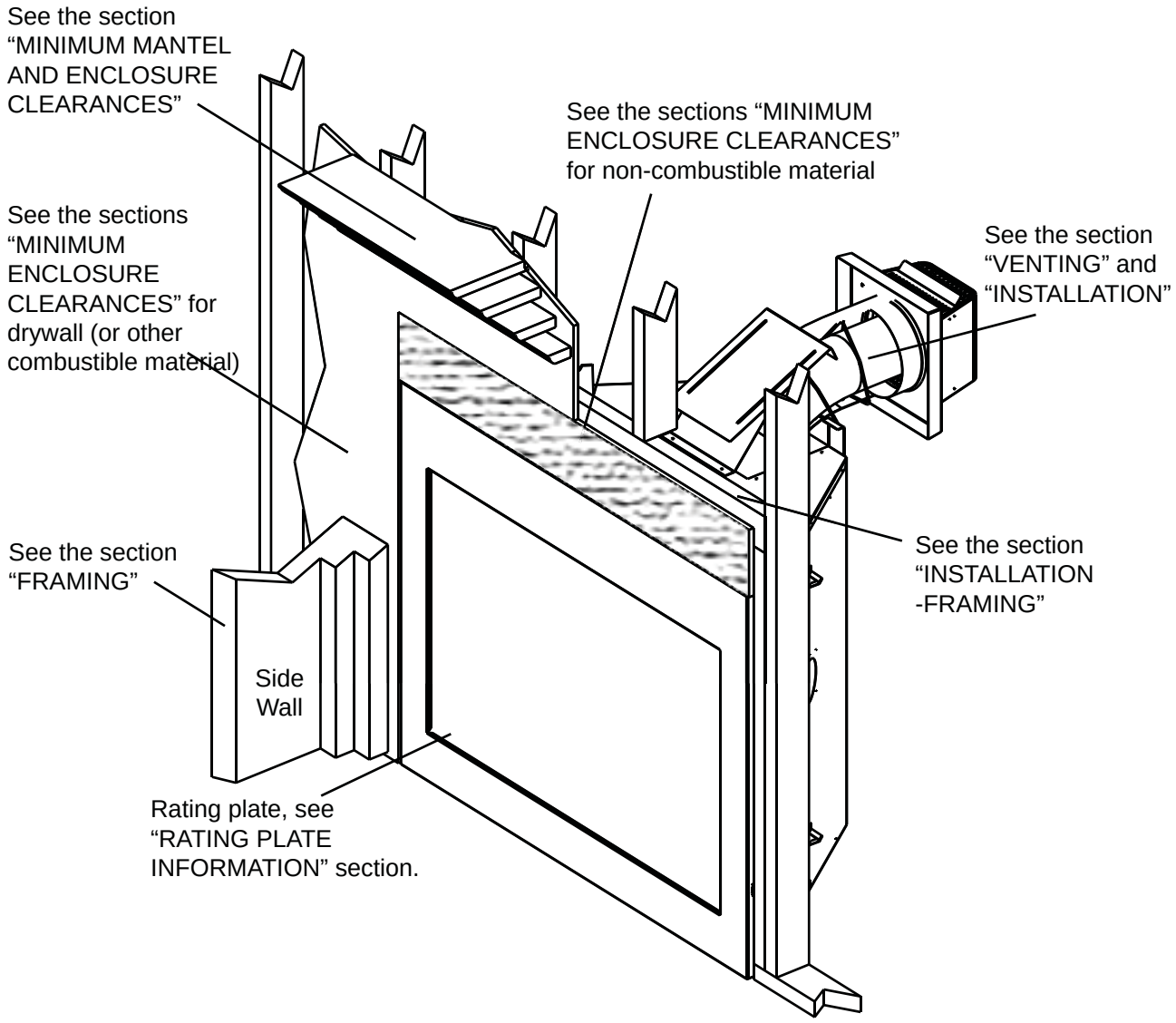

2.0 INTRODUCTION

⚠ WARNING

- **THIS APPLIANCE IS HOT WHEN OPERATED AND CAN CAUSE SEVERE BURNS IF CONTACTED.**
- **ANY CHANGES TO THIS APPLIANCE OR IT'S CONTROLS CAN BE DANGEROUS AND IS PROHIBITED.**
- Do not operate appliance before reading and understanding operating instructions. Failure to operate appliance according to operating instructions could cause fire or injury.
- Risk of fire or asphyxiation do not operate appliance with fixed glass removed.
- Do not connect 110 volts to the control valve.
- Risk of burns. The appliance should be turned off and cooled before servicing.
- Do not install damaged, incomplete or substitute components.
- Risk of cuts and abrasions. Wear protective gloves and safety glasses during installation. Sheet metal edges may be sharp.
- Do not burn wood or other materials in this appliance.
- Children and adults should be alerted to the hazards of high surface temperature and should stay away to avoid burns or clothing ignition.
- Young children should be carefully supervised when they are in the same room as the appliance. Toddlers, young children and others may be susceptible to accidental contact burns. A physical barrier is recommended if there are at risk individuals in the house. To restrict access to an appliance or stove, install an adjustable safety gate to keep toddlers, young children and other at risk individuals out of the room and away from hot surfaces.
- Clothing or other flammable material should not be placed on or near the appliance.
- Due to high temperatures, the appliance should be located out of traffic and away from furniture and draperies.
- Ensure you have incorporated adequate safety measure to protect infants/toddlers from touching hot surfaces.
- Even after the appliance is out, the glass and/or screen will remain hot for an extended period of time.
- Check with your local hearth specialty dealer for safety screens and hearth guards to protect children from hot surfaces. These screens and guards must be fastened to the floor.
- Any safety screen or guard removed for servicing must be replaced prior to operating the appliance.
- The appliance is a vented gas-fired appliance. Do not burn wood or other materials in the appliance.
- It is imperative that the control compartments, burners and circulating blower and its passageway in the appliance and venting system are kept clean. The appliance and its venting system should be inspected before use and at least annually by a qualified service person. More frequent cleaning may be required due to excessive lint from carpeting, bedding material, etc. The appliance area must be kept clear and free from combustible materials, gasoline and other flammable vapors and liquids.
- Under no circumstances should this appliance be modified.
- This appliance must not be connected to a chimney flue pipe serving a separate solid fuel burning appliance.
- Do not use this appliance if any part has been under water. Immediately call a qualified service technician to inspect the appliance and to replace any part of the control system and any gas control which has been under water.
- Do not operate the appliance with the glass door removed, cracked or broken. Replacement of the glass should be done by a licensed or qualified service person.
- Do not strike or slam shut the appliance glass door.
- When equipped with pressure relief doors, they must be kept closed while the appliance is operating to prevent exhaust fumes containing carbon monoxide, from entering into the home. Temperatures of the exhaust escaping through these openings can also cause the surrounding combustible materials to overheat and catch fire.Only doors / optional fronts certified with the unit are to be installed on the appliance.
- Only doors / optional fronts certified with the unit are to be installed on the appliance.
- Keep the packaging material out of reach of children and dispose of the material in a safe manner. As with all plastic bags, these are not toys and should be kept away from children and infants.
- As with any combustion appliance, we recommend having your appliance regularly inspected and serviced as well as having a Carbon Monoxide Detector installed in the same area to defend you and your family against Carbon Monoxide.
- Ensure clearances to combustibles are maintained when building a mantel or shelves above the appliance. Elevated temperatures on the wall or in the air above the appliance can cause melting, discolouration or damage to decorations, a T.V. or other electronic components.
- This appliance uses and requires a fast acting thermocouple. Replace only with a fast acting thermocouple supplied by Wolf Steel Ltd.

3.1C

2.1 DIMENSIONS

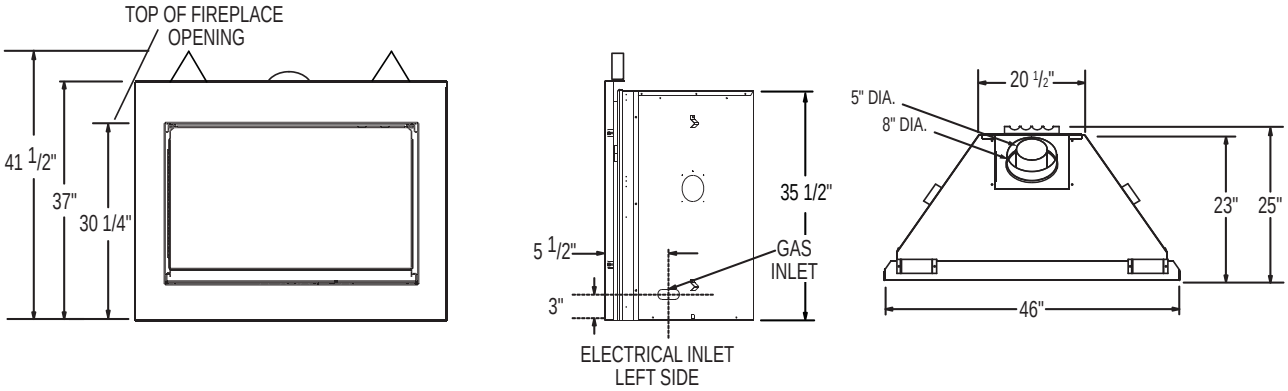

2.2 GENERAL INSTRUCTIONS

⚠ WARNING
ALWAYS LIGHT THE PILOT WHETHER FOR THE FIRST TIME OR IF THE GAS SUPPLY HAS RUN OUT, WITH THE GLASS DOOR OPENED OR REMOVED.
PROVIDE ADEQUATE CLEARANCE FOR SERVICING AND OPERATING THE APPLIANCE.
PROVIDE ADEQUATE VENTILATION.
NEVER OBSTRUCT THE FRONT OPENING OF THE APPLIANCE.
OBJECTS PLACED IN FRONT OF THE APPLIANCE MUST BE KEPT A MINIMUM OF 48” FROM THE FRONT FACE OF THE APPLIANCE.
SURFACES AROUND AND ESPECIALLY ABOVE THE APPLIANCE CAN BECOME HOT. AVOID CONTACT WHEN THE APPLIANCE IS OPERATING.
FIRE RISK. EXPLOSION HAZARD. **HIGH PRESSURE WILL DAMAGE VALVE. DISCONNECT GAS SUPPLY PIPING BEFORE PRESSURE TESTING GAS LINE AT TEST PRESSURES ABOVE 1/2 PSIG. CLOSE THE MANUAL SHUT-OFF VALVE BEFORE PRESSURE TESTING GAS LINE AT TEST PRESSURES EQUAL TO OR LESS THAN 1/2 PSIG.**
USE ONLY WOLF STEEL APPROVED OPTIONAL ACCESSORIES AND REPLACEMENT PARTS WITH THIS APPLIANCE. USING NON-LISTED ACCESSORIES (BLOWERS, DOORS, LOUVRES, TRIMS, GAS COMPONENTS, VENTING COMPONENTS, ETC.) COULD RESULT IN A SAFETY HAZARD AND WILL VOID THE WARRANTY AND CERTIFICATION.

THIS GAS APPLIANCE SHOULD BE INSTALLED AND SERVICED BY A QUALIFIED INSTALLER to conform with local codes. Installation practices vary from region to region and it is important to know the specifics that apply to your area, for example in Massachusetts State:

- This product must be installed by a licensed plumber or gas fitter when installed within the commonwealth of Massachusetts.
- The appliance damper must be removed or welded in the open position prior to installation of a appliance insert or gas log.
- The appliance off valve must be a “T” handle gas cock.
- The flexible connector must not be longer than 36 inches.
- A Carbon Monoxide detector is required in all rooms containing gas fired appliances.
- The appliance is not approved for installation in a bedroom or bathroom unless the unit is a direct vent sealed combustion product.

The installation must conform with local codes or, in absence of local codes, the National Gas and Propane Installation Code CSA B149.1 in Canada, or the National Fuel Gas Code, ANSI Z223.1 / NFPA 54 in the United States. Suitable for mobile home installation if installed in accordance with the current standard CAN/CSA Z240MH Series, for gas equipped mobile homes, in Canada or ANSI Z223.1 and NFPA 54 in the United States.

NATIONAL FIREPLACE INSTITUTE NFI CERTIFIED www.nficertified.org

We suggest that our gas hearth products be installed and serviced by professionals who are certified in the U.S. by the National Fireplace Institute® (NFI) as NFI Gas Specialists

As long as the required clearance to combustibles is maintained, the most desirable and beneficial location for an appliance is in the center of a building, thereby allowing the most efficient use of the heat created. The location of windows, doors and the traffic flow in the room where the appliance is to be located should be considered. If possible, you should choose a location where the vent will pass through the house without cutting a floor or roof joist.

If the appliance is installed directly on carpeting, vinyl tile or other combustible material other than wood flooring, the appliance shall be installed on a metal or wood panel extending the full width and depth.

Some appliances have optional fans or blowers. If an optional fan or blower is installed, the junction box must be electrically connected and grounded in accordance with local codes, use the current CSA C22.1 Canadian Electrical Code in Canada or the ANSI/NFPA 70 National Electrical code in the United States.

4.1A

2.3 GENERAL INFORMATION

FOR YOUR SATISFACTION, THIS APPLIANCE HAS BEEN TEST-FIRED TO ASSURE ITS OPERATION AND QUALITY!

APPLIANCE		
	NG	**LP**
Altitude (FT)	0-4,500	0-4500
Max. Input (BTU/HR)	24,000	24,000
Max. Output Steady State (BTU/HR)	16,000	16,000
Efficiency (w/the fan on)	67%	67%
A.F.U.E. (Annual Fuel Utilization Efficiency)	54.2%	54.2%
Min. Inlet Gas Supply Pressure	4.5" Water Column	11" Water Column
Max. Inlet Gas Supply Pressure	7" Water Column	13" Water Column
Manifold Pressure (Under Flow Conditions)	3.5" Water Column	10" Water Column

When the appliance is installed at elevations above 4,500ft, and in the absence of specific recommendations from the local authority having jurisdiction, the certified high altitude input rating shall be reduced at the rate of 4% for each additional 1,000ft. Expansion / contraction noises during heating up and cooling down cycles are normal and to be expected.

This appliance is approved for bathroom, bedroom and bed-sitting room installations and is suitable for mobile home installation.

No external electricity (110 volts or 24 volts) is required for the gas system operation.

Use only accessories designed for and listed with your specific appliance.

2.4 RATING PLATE INFORMATION

<u>INSTALLER:</u> It is your responsibility to check off the appropriate box on the rating plate according to the model, venting and gas type of the appliance.

For rating plate location, see “INSTALLATION OVERVIEW” section.

This illustration is for reference only. Refer to the rating plate on the appliance for accurate information.

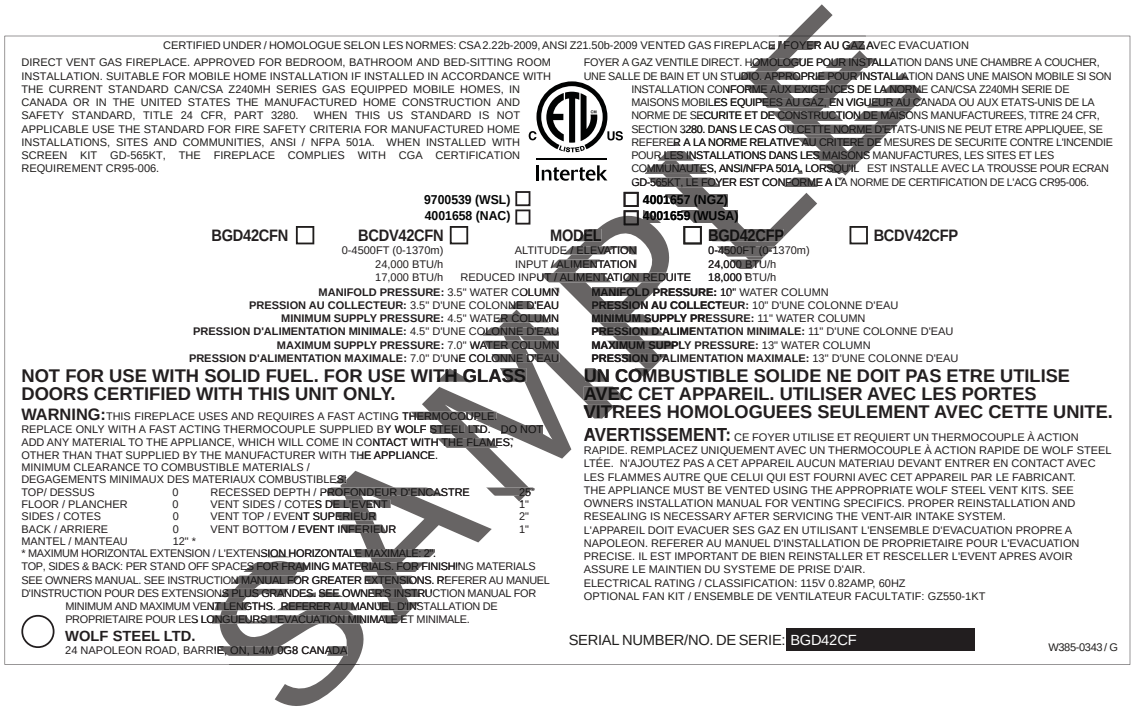

CERTIFIED UNDER / HOMOLOGUE SELON LES NORMES: CSA 2.22b-2009, ANSI Z21.50b-2009 VENTED GAS FIREPLACE / FOYER AU GAZ AVEC EVACUATION

DIRECT VENT GAS FIREPLACE. APPROVED FOR BEDROOM, BATHROOM AND BED-SITTING ROOM INSTALLATION. SUITABLE FOR MOBILE HOME INSTALLATION IF INSTALLED IN ACCORDANCE WITH THE CURRENT STANDARD CAN/CSA Z240MH SERIES GAS EQUIPPED MOBILE HOMES, IN CANADA OR IN THE UNITED STATES THE MANUFACTURED HOME CONSTRUCTION AND SAFETY STANDARD, TITLE 24 CFR, PART 3280. WHEN THIS US STANDARD IS NOT APPLICABLE USE THE STANDARD FOR FIRE SAFETY CRITERIA FOR MANUFACTURED HOME INSTALLATIONS, SITES AND COMMUNITIES, ANSI / NFPA 501A. WHEN INSTALLED WITH SCREEN KIT GD-565KT, THE FIREPLACE COMPLIES WITH CGA CERTIFICATION REQUIREMENT CR95-006.

FOYER A GAZ VENTILE DIRECT. HOMOLOGUE POUR INSTALLATION DANS UNE CHAMBRE A COUCHER, UNE SALLE DE BAIN ET UN STUDIO. APPROPRIE POUR INSTALLATION DANS UNE MAISON MOBILE SI SON INSTALLATION CONFORME AUX EXIGENCES DE LA NORME CAN/CSA Z240MH SERIE DE MAISONS MOBILES EQUIPTES AU GAZ, EN VIGUEUR AU CANADA OU AUX ETATS-UNIS DE LA NORME DE SECURITE ET DE CONSTRUCTION DE MAISONS MANUFACTUREES, TITRE 24 CFR, SECTION 3280. DANS LE CAS OU CETTE NORME D'ETATS-UNIS NE PEUT ETRE APPLIQUEE, SE REFERER A LA NORME RELATIVE AU CRITERE DE MESURES DE SECURITE CONTRE L'INCENDIE POUR LES INSTALLATIONS DANS LES MAISONS MANUFACTURES, LES SITES ET LES COMMUNAUTES, ANSI/NFPA 501A. LORSQU'IL EST INSTALLE AVEC LA TROUSSE POUR ECRAN GD-565KT, LE FOYER EST CONFORME A L'A NORME DE CERTIFICATION DE L'ACG CR95-006.

C ETL LISTED US
Intertek

9700539 (WSL) ☐
4001658 (NAC) ☐
☐ 4001657 (NGZ)
☐ 4001659 (WUSA)

MODEL

BGD42CFN ☐	BCDV42CFN ☐		☐ BGD42CFP	☐ BCDV42CFP
	0-4500FT (0-1370m)	ALTITUDE / ELEVATION	0-4500FT (0-1370m)	
	24,000 BTU/h	INPUT / ALIMENTATION	24,000 BTU/h	
	17,000 BTU/h	REDUCED INPUT / ALIMENTATION REDUITE	18,000 BTU/h	

MANIFOLD PRESSURE: 3.5" WATER COLUMN
PRESSION AU COLLECTEUR: 3.5" D'UNE COLONNE D'EAU
MINIMUM SUPPLY PRESSURE: 4.5" WATER COLUMN
PRESSION D'ALIMENTATION MINIMALE: 4.5" D'UNE COLONNE D'EAU
MAXIMUM SUPPLY PRESSURE: 7.0" WATER COLUMN
PRESSION D'ALIMENTATION MAXIMALE: 7.0" D'UNE COLONNE D'EAU

MANIFOLD PRESSURE: 10" WATER COLUMN
PRESSION AU COLLECTEUR: 10" D'UNE COLONNE D'EAU
MINIMUM SUPPLY PRESSURE: 11" WATER COLUMN
PRESSION D'ALIMENTATION MINIMALE: 11" D'UNE COLONNE D'EAU
MAXIMUM SUPPLY PRESSURE: 13" WATER COLUMN
PRESSION D'ALIMENTATION MAXIMALE: 13" D'UNE COLONNE D'EAU

NOT FOR USE WITH SOLID FUEL. FOR USE WITH GLASS DOORS CERTIFIED WITH THIS UNIT ONLY.

WARNING: THIS FIREPLACE USES AND REQUIRES A FAST ACTING THERMOCOUPLE. REPLACE ONLY WITH A FAST ACTING THERMOCOUPLE SUPPLIED BY WOLF STEEL LTD. DO NOT ADD ANY MATERIAL TO THE APPLIANCE, WHICH WILL COME IN CONTACT WITH THE FLAMES, OTHER THAN THAT SUPPLIED BY THE MANUFACTURER WITH THE APPLIANCE.

MINIMUM CLEARANCE TO COMBUSTIBLE MATERIALS /
DEGAGEMENTS MINIMAUX DES MATERIAUX COMBUSTIBLES:

TOP/ DESSUS	0	RECESSED DEPTH / PROFONDEUR D'ENCASTRE	26"
FLOOR / PLANCHER	0	VENT SIDES / COTES DE L'EVENT	1"
SIDES / COTES	0	VENT TOP / EVENT SUPERIEUR	2"
BACK / ARRIERE	0	VENT BOTTOM / EVENT INFERIEUR	1"
MANTEL / MANTEAU	12" *		

* MAXIMUM HORIZONTAL EXTENSION / L'EXTENSION HORIZONTALE MAXIMALE: 2'.
TOP, SIDES & BACK: PER STAND OFF SPACES FOR FRAMING MATERIALS, FOR FINISHING MATERIALS SEE OWNERS MANUAL. SEE INSTRUCTION MANUAL FOR GREATER EXTENSIONS. REFERER AU MANUEL D'INSTRUCTION POUR DES EXTENSIONS PLUS GRANDES. SEE OWNER'S INSTRUCTION MANUAL FOR MINIMUM AND MAXIMUM VENT LENGTHS. REFERER AU MANUEL D'INSTALLATION DE PROPRIETAIRE POUR LES LONGUEURS L'EVACUATION MINIMALE ET MINIMALE.

UN COMBUSTIBLE SOLIDE NE DOIT PAS ETRE UTILISE AVEC CET APPAREIL. UTILISER AVEC LES PORTES VITREES HOMOLOGUEES SEULEMENT AVEC CETTE UNITE.

AVERTISSEMENT: CE FOYER UTILISE ET REQUIERT UN THERMOCOUPLE À ACTION RAPIDE. REMPLACEZ UNIQUEMENT AVEC UN THERMOCOUPLE À ACTION RAPIDE DE WOLF STEEL LTÉE. N'AJOUTEZ PAS A CET APPAREIL AUCUN MATERIAU DEVANT ENTRER EN CONTACT AVEC LES FLAMMES AUTRE QUE CELUI QUI EST FOURNI AVEC CET APPAREIL PAR LE FABRICANT.

THE APPLIANCE MUST BE VENTED USING THE APPROPRIATE WOLF STEEL VENT KITS. SEE OWNERS INSTALLATION MANUAL FOR VENTING SPECIFICS. PROPER REINSTALLATION AND RESEALING IS NECESSARY AFTER SERVICING THE VENT-AIR INTAKE SYSTEM.

L'APPAREIL DOIT EVACUER SES GAZ EN UTILISANT L'ENSEMBLE D'EVACUATION PROPRE A NAPOLEON. REFERER AU MANUEL D'INSTALLATION DE PROPRIETAIRE POUR L'EVACUATION PRECISE. IL EST IMPORTANT DE BIEN REINSTALLER ET RESCELLER L'EVENT APRES AVOIR ASSURE LE MAINTIEN DU SYSTEME DE PRISE D'AIR.

ELECTRICAL RATING / CLASSIFICATION: 115V 0.82AMP, 60HZ
OPTIONAL FAN KIT / ENSEMBLE DE VENTILATEUR FACULTATIF: GZ550-1KT

WOLF STEEL LTD.
24 NAPOLEON ROAD, BARRIE, ON, L4M 0G8 CANADA

SERIAL NUMBER/NO. DE SERIE: BGD42CF

W385-0343 / G

SAMPLE

3.0 VENTING

⚠ WARNING

RISK OF FIRE, MAINTAIN SPECIFIED AIR SPACE CLEARANCES TO VENT PIPE AND APPLIANCE.

IF VENTING IS INCLUDED WITH SPACERS THE VENT SYSTEM MUST BE SUPPORTED EVERY 3 FEET FOR BOTH VERTICAL AND HORIZONTAL RUNS. USE SUPPORTS OR EQUIVALENT NON-COMBUSTIBLE STRAPPING TO MAINTAIN THE REQUIRED CLEARANCE FROM COMBUSTIBLES. USE WOLF STEEL LTD. SUPPORT RING ASSEMBLY W010-0370 OR EQUIVALENT NON-COMBUSTIBLE STRAPPING TO MAINTAIN THE MINIMUM CLEARANCE TO COMBUSTIBLES FOR BOTH VERTICAL AND HORIZONTAL RUNS. SPACERS ARE ATTACHED TO THE INNER PIPE AT PREDETERMINED INTERVALS TO MAINTAIN AN EVEN AIR GAP TO THE OUTER PIPE. THIS GAP IS REQUIRED FOR SAFE OPERATION. A SPACER IS REQUIRED AT THE START, MIDDLE AND END OF EACH ELBOW TO ENSURE THIS GAP IS MAINTAINED. THESE SPACERS MUST NOT BE REMOVED.

THIS APPLIANCE USES A 5” EXHAUST / 8” AIR INTAKE VENT PIPE SYSTEM.
Refer to the section applicable to your installation.

For safe and proper operation of the appliance follow the venting instruction exactly. Deviation from the minimum vertical vent length can create difficulty in burner start-up and/or carboning. Under extreme vent configurations, allow several minutes (5-15) for the flame to stabilize after ignition. Provide a means for visually checking the vent connection to the appliance after the appliance is installed. Use a firestop, vent pipe shield or attic insulation shield when penetrating interior walls, floor or ceiling.
NOTE: If for any reason the vent air intake system is disassembled; reinstall per the instructions provided for the initial installation.

7.2A

REQUIRED RISE ON HORIZONTAL VENTING	
	BGD42CF
RIGID VENTING	0"
FLEXIBLE VENTING	0"
For optimum performance, it is recommended that all horizontal runs have a 1" rise per foot.	

3.1 VENTING LENGTHS AND COMPONENTS

Use only Wolf Steel, Simpson Dura-Vent, Selkirk Direct Temp, American Metal Amerivent or Metal-Fab venting components. Minimum and maximum vent lengths, for both horizontal and vertical installations, and air terminal locations for either system are set out in this manual and must be adhered to. For Simpson Dura-Vent, Selkirk Direct Temp, American Metal Amerivent and Metal-Fab follow the installation procedure provided with the venting components.

A starter adaptor must be used with the following vent systems and may be purchased from the corresponding supplier:

PART	5”/8”	SUPPLIER	WEBSITE
Duravent	W175-0170	Wolf Steel	www.duravent.com
Amerivent	5DSC-N2	American Metal	www.americanmetalproducts.com
Direct Temp	5DT-AA	Selkirk	www.selkirkcorp.com
SuperSeal	5DDA	Metal-Fab	www.mtlfab.com

For Simpson Dura-Vent, Selkirk Direct Temp, American Metal Amerivent and Metal-Fab follow the installation procedure found on the website for your venting supplier.

For vent systems that provide seals on the inner exhaust flue, only the outer air intake joints must be sealed using a red high temperature silicone (RTV). This same sealant may be used on both the inner exhaust and outer intake vent pipe joints of all other approved vent systems except for the exhaust vent pipe connection to the appliance flue collar which must be sealed using the black high temperature sealant Mill Pac.

When using Wolf Steel venting components, use only approved Wolf Steel rigid / flexible components with the following termination kits: wall terminal kit **GD422-1**, **GD422R-1**, or 1/12 to 7/12 pitch roof terminal kit **GD410**, 8/12 to 12/12 roof terminal kit **GD411**, flat roof terminal kit **GD412** or periscope kit **GD401** (for wall penetration below grade). With flexible venting, in conjunction with the various terminations, use either the 5 foot vent kit **GD420** or the 10 foot vent kit **GD430**.

For optimum flame appearance and appliance performance, keep the vent length and number of elbows to a minimum.
The air terminal must remain unobstructed at all times. Examine the air terminal at least once a year to verify that it is unobstructed and undamaged.
Rigid and flexible venting systems must not be combined. Different venting manufacturer components must not be combined.

These vent kits allow for either horizontal or vertical venting of the appliance. The maximum allowable horizontal run is 20 feet. The maximum allowable vertical vent length is 40 feet. The maximum number of vent connections is two horizontally or three vertically (excluding the appliance and the air terminal connections) when using flexible venting.

Horizontal runs may have a 0” rise per foot however for optimum performance it is recommended that all horizontal runs have a minimum 1/4” rise per foot using flexible venting. For safe and proper operation of the appliance, follow the venting instructions exactly.

A terminal shall not terminate directly above a sidewalk or paved driveway which is located between two single family dwellings and serves both dwellings. Local codes or regulations may require different clearances.
Do not allow the inside liner to bunch up on horizontal or vertical runs and elbows. Keep it pulled tight. A 1¼” air gap all around between the inner liner and outer liner is required for safe operation.

8.3

3.2 TYPICAL VENT INSTALLATIONS

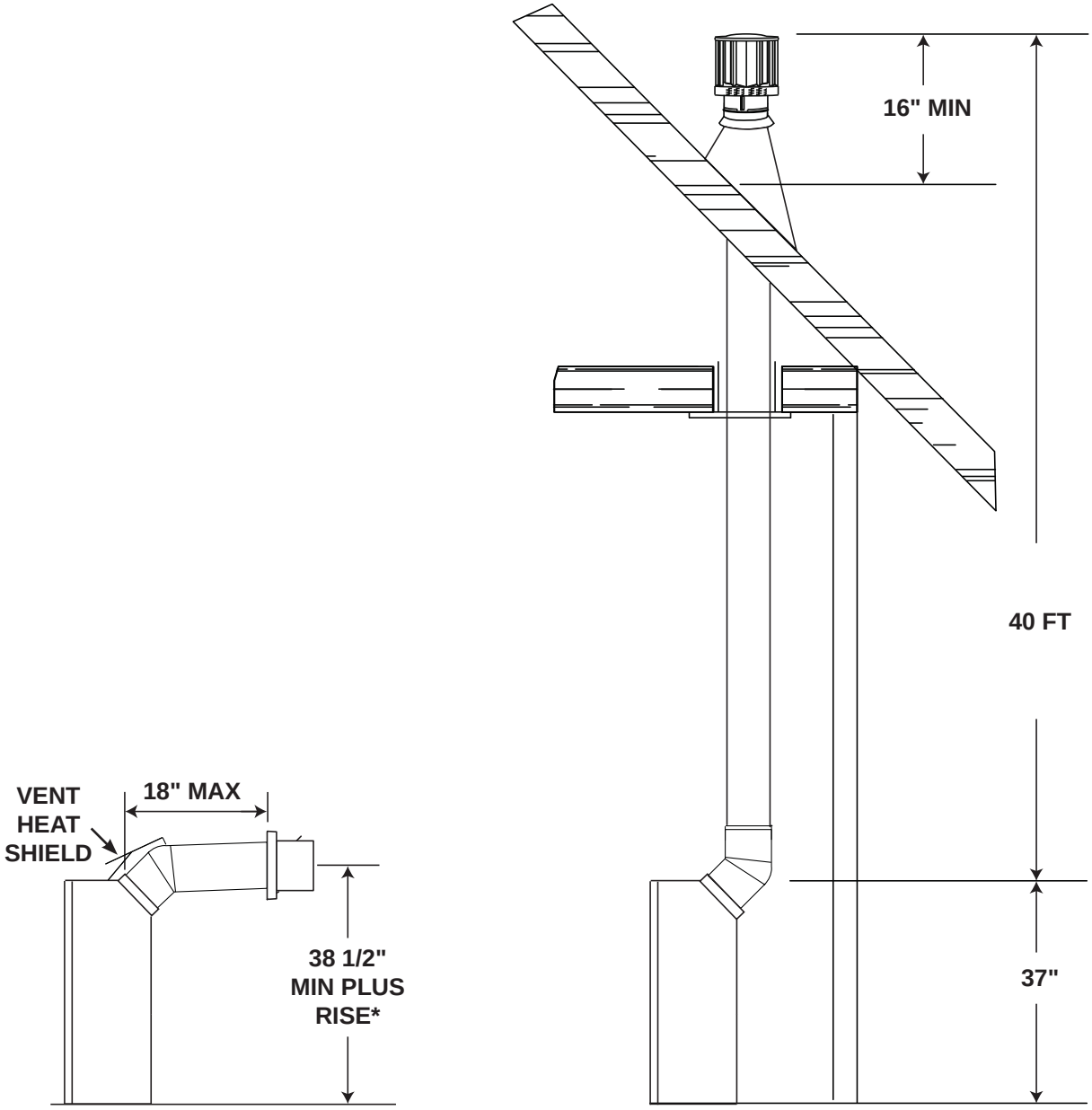

* See venting section.

<u>NOTE:</u> When terminating vertically, the restrictor plate W500-0205 must be installed. Refer to "RESTRICTING VERTICAL VENTS" section.

3.3 SPECIAL VENT INSTALLATIONS

3.3.1 PERISCOPE TERMINATION

Use the periscope kit to locate the air termination above grade. The periscope must be installed so that when final grading is completed, the bottom air slot is located a minimum of 12” above grade. The maximum allowable vent length is 10’ for a fireplace and 8’ for a stove.

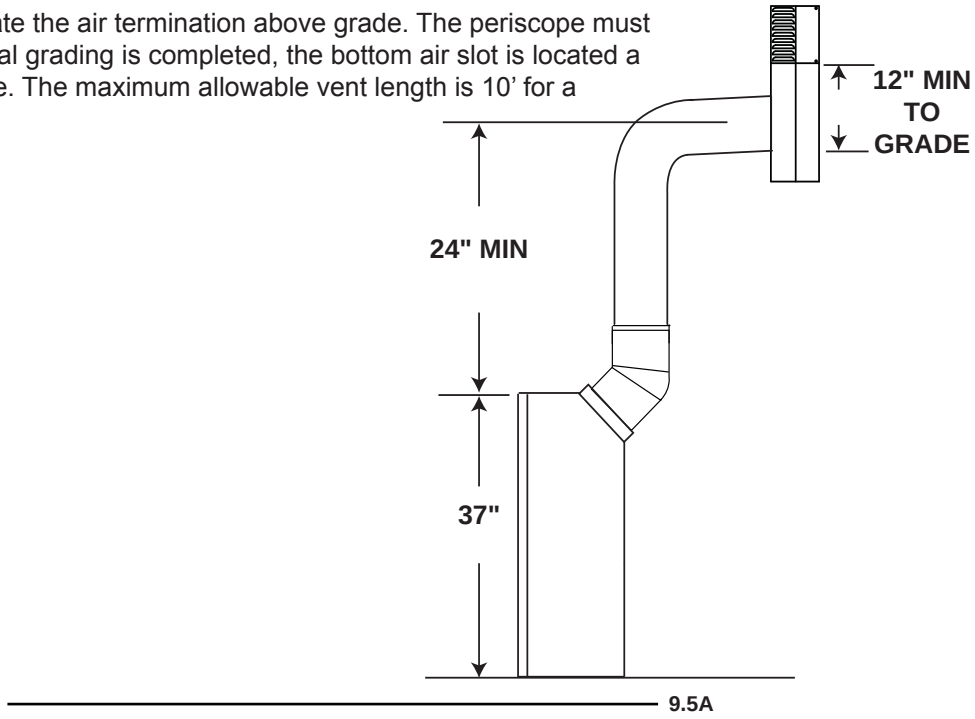

3.4 VENT TERMINAL CLEARANCES

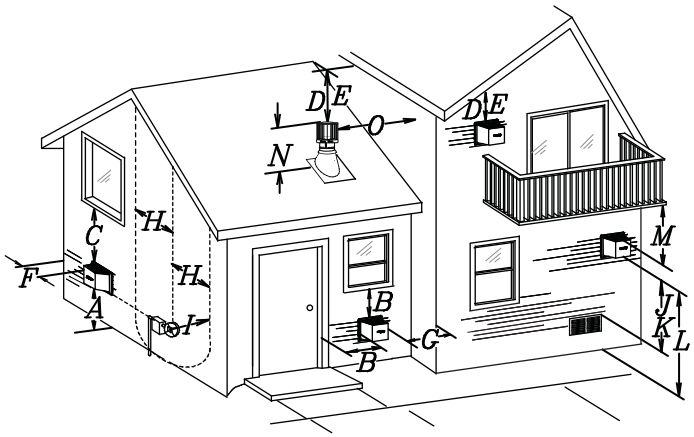

COVERED BALCONY APPLICATIONS ††*

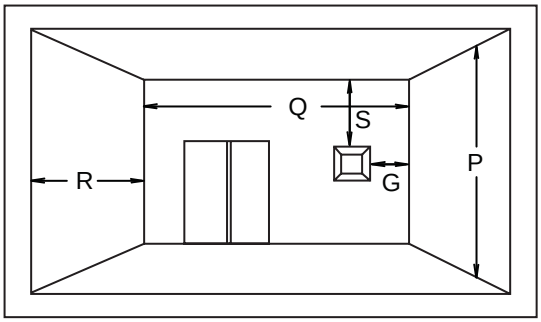

Q_{MIN}	= 3 feet
R_{MAX}	= 2 x Q_{ACTUAL}
R_{MAX}	≤ 15 feet

	INSTALLATIONS		
	CANADA	U.S.A.	
A	12”	12”	Clearance above grade, veranda porch, deck or balcony.
B	12” Δ	9” Δ	Clearance to windows or doors that open.
C	12” *	12” *	Clearance to permanently closed windows.
D	18” **	18” **	Vertical clearance to ventilated soffits located above the terminal within a horizontal distance of 2’ from the center line of the terminal.
E	12” **	12” **	Clearance to unventilated soffit.
F	0”	0”	Clearance to an outside corner wall.
G	0” ***	0” ***	Clearance to an inside **non**-combustible corner wall or protruding **non**-combustible obstructions (chimney, etc.).
	2” ***	2” ***	Clearance to an inside combustible corner wall or protruding combustible obstructions (vent chase, etc.).
H	3’	3’ ****	Clearance to each side of the center line extended above the meter / regulator assembly to a maximum vertical distance of 15’.
I	3’	3’ ****	Clearance to a service regulator vent outlet.
J	12”	9”	Clearance to a non-mechanical air supply inlet to the building or a combustion air inlet to any other appliance.
K	6’	3’ †	Clearance to a mechanical air supply inlet.
L	7’ ‡	7’ ****	Clearance above a paved sidewalk or paved driveway located on public property.
M	12” ††	12” ****	Clearance under a veranda, porch or deck.
N	16”	16”	Clearance above the roof.
O	2’ †*	2’ †*	Clearance from an adjacent wall including neighbouring buildings.
P	8’	8’	Roof must be **non**-combustible without openings.
Q	3’	3’	See chart for wider wall dimensions.
R	6’	6’	See chart for deeper wall dimensions. The terminal shall not be installed on any wall that has an opening between the terminal and the open side of the structure.
S	12”	12”	Clearance under a covered balcony

Δ The terminal shall not be located less than 6 feet under a window that opens on a horizontal plane in a structure with three walls and a roof.

* Recommended to prevent condensation on windows and thermal breakage

** It is recommended to use a heat shield and to maximize the distance to vinyl clad soffits.

*** The periscope requires a minimum 18 inches clearance from an inside corner.

**** This is a recommended distance. For additional requirements check local codes.

† 3 feet above if within 10 feet horizontally.

‡ A vent shall not terminate where it may cause hazardous frost or ice accumulations on adjacent property surfaces.

†† Permitted only if the veranda, porch, or deck is fully open on a minimum of two sides beneath the floor.

†* Recommended to prevent recirculation of exhaust products. For additional requirements check local codes.

††* Permitted only if the balcony is fully open on a minimum of one side.

NOTE: Clearances are in accordance with local installation codes and the requirements of the gas supplier.

12.1C

3.5 VENT APPLICATION FLOW CHART

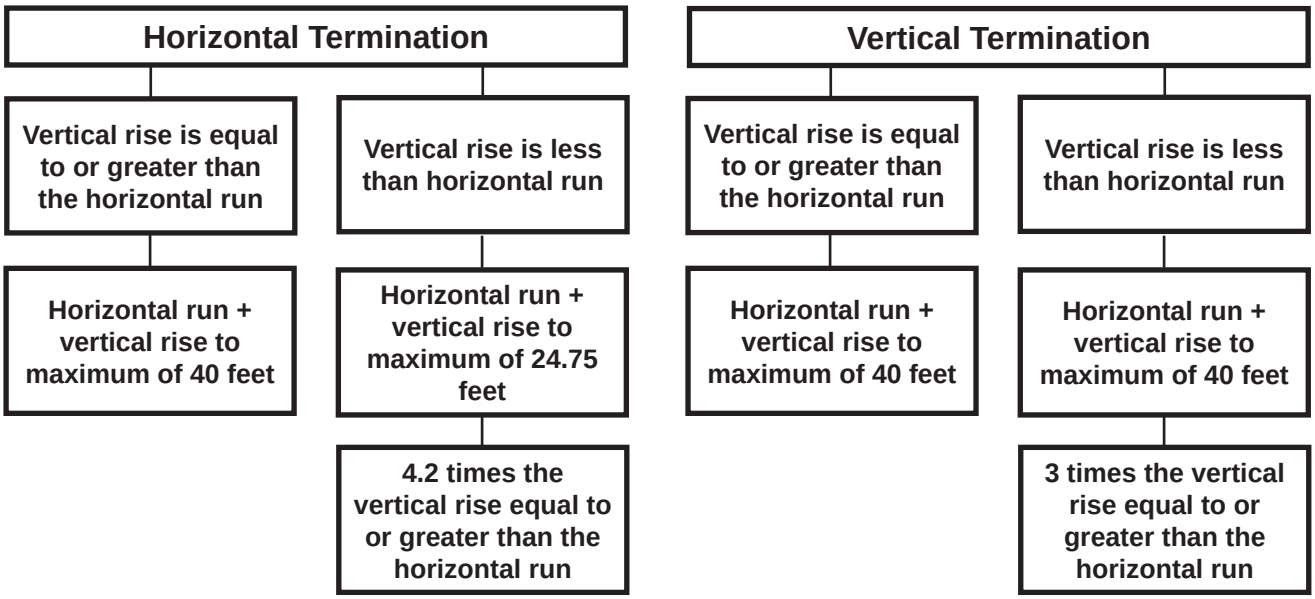

13.1

3.6 DEFINITIONS

For the following symbols used in the venting calculations and examples are:
> - greater than
≥ - equal to or greater than
< - less than
≤ - equal to or less than
H_T - total of both horizontal vent lengths (Hr) and offsets (Ho) in feet
H_R - combined horizontal vent lengths in feet
H_O - offset factor: .03 (total degrees of offset - 135°*) in feet
V_T - combined vertical vent lengths in feet

14.2

3.7 ELBOW VENT LENGTH VALUES

	FEET	INCHES
1°	0.03	0.5
15°	0.45	6.0
30°	0.9	11.0
45°*	1.35	16.0
90°*	2.7	32.0

* The first 45° and 90°offset has a zero value and is shown in the formula as -45° and - 90° respectively or -135° when combined.

15.2

3.8 HORIZONTAL TERMINATION

$(H_T) \leq (V_T)$

Simple venting configuration (only one 45° and 90° elbow)

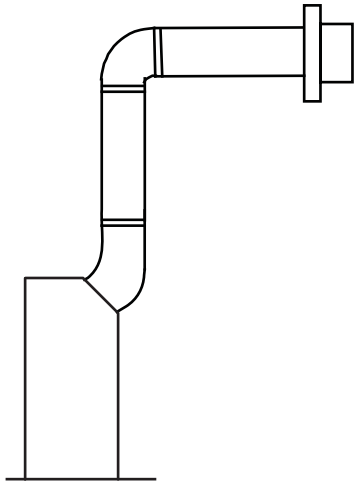

See graph to determine the required vertical rise V_T for the required horizontal run H_T.

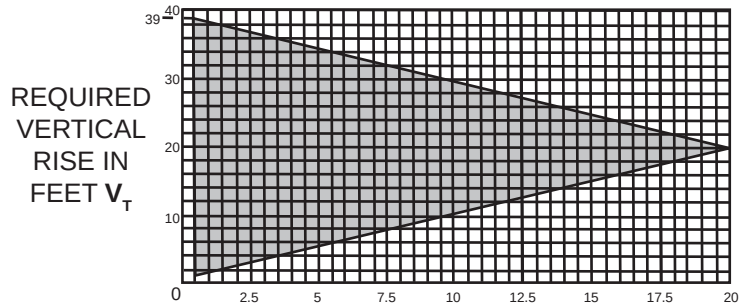

The shaded area within the lines represents acceptable values for H_T and V_T

For vent configurations requiring more than one 45° elbow and 90° elbow, the following formulas apply:

Formula 1: $H_T \leq V_T$
Formula 2: $H_T + V_T \leq 40$ feet

Example:

V_1 = 8 FT
$V_T = V_1$ = 8 FT
H_1 = 2.5 FT
H_2 = 2 FT
$H_R = H_1 + H_2$ = 2.5 + 2 = 4.5 FT
H_O = .03 (one 45° elbow + two 90° elbows - 135°) = .03 (225 - 135°) = 2.7 FT
$H_T = H_R + H_O$ = 4.5 + 2.7 = 7.2 FT
$H_T + V_T$ = 7.2 + 8 = 15.2 FT

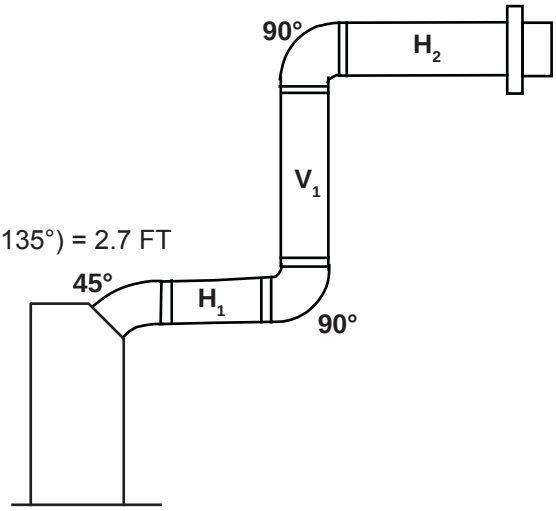

Formula 1: $H_T \leq V_T$
$7.2 \leq 8$

Formula 2: $H_T + V_T \leq 40$ **FT**
$15.2 \leq 40$

Since both formulas are met, this vent configuration is acceptable.

16.5

$(H_T) > (V_T)$

Simple venting configuration (only one 45° and 90° elbow)

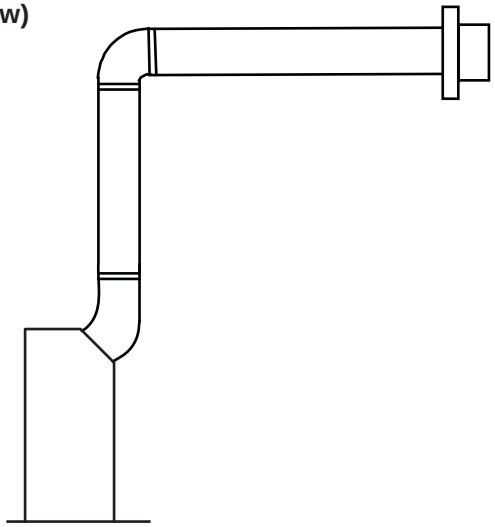

See graph to determine the required vertical rise V_T for the required horizontal run H_T.

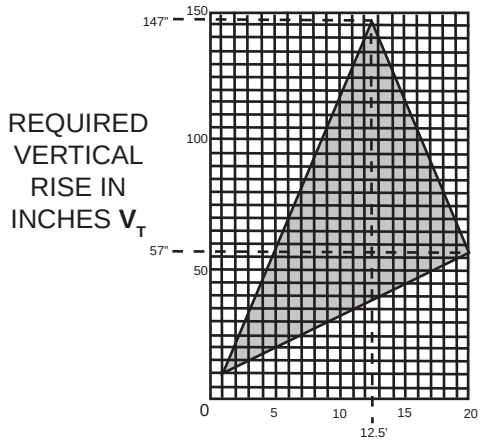

HORIZONTAL VENT RUN PLUS OFFSET IN FEET H_T

The shaded area within the lines represents acceptable values for H_T and V_T

For vent configurations requiring more than one 45° elbow and 90° elbow, the following formulas apply:

Formula 1: $H_T \leq 4.2\ V_T$

Formula 2: $H_T + V_T \leq 24.75$ feet

Example:

V_1 = 4 FT

V_2 = 1.5 FT

$V_T = V_1 + V_2$ = 4 FT + 1.5 FT = 5.5 FT

H_1 = 2 FT

H_2 = 1 FT

H_3 = 1 FT

H_4 = 1.5 FT

$H_R = H_1 + H_2 + H_3 + H_4$ = 2 + 1 + 1 + 1.5 = 5.5 FT

H_O = .03 (one 45° elbow + four 90° elbows - 135°) = .03 (405 - 135°) = 8.1 FT

$H_T = H_R + H_O$ = 5.5 + 8.1 = 13.6 FT

$H_T + V_T$ = 13.6 + 5.5 = 19.1 FT

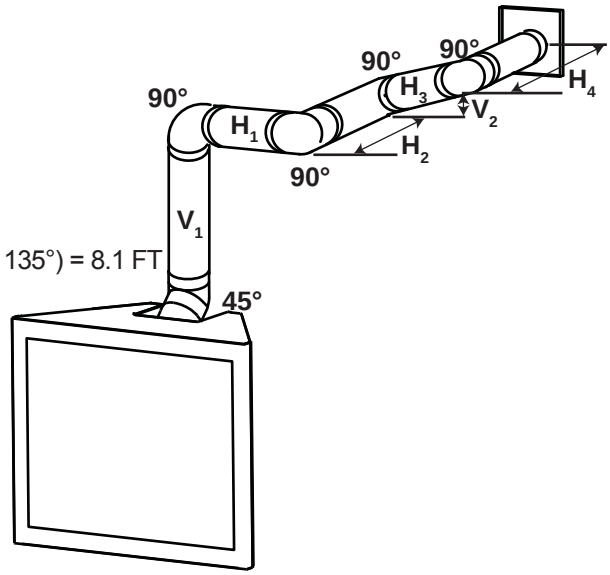

Formula 1: $H_T \leq 4.2\ V_T$

$4.2\ V_T$ = 4.2 x 5.5 FT = 23.1 FT

13.6 ≤ 23.1

Formula 2: $H_T + V_T \leq 24.75$ FT

19.1 ≤ 24.75

Since both formulas are met, this vent configuration is acceptable.

16.5_2

3.9 VERTICAL TERMINATION

$(H_T) \leq (V_T)$

Simple venting configurations.

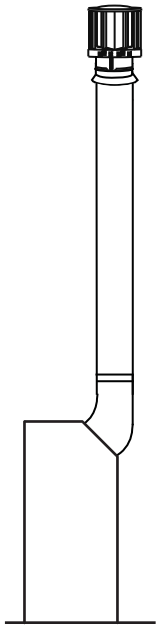

See graph to determine the required vertical rise V_T for the required horizontal run H_T.

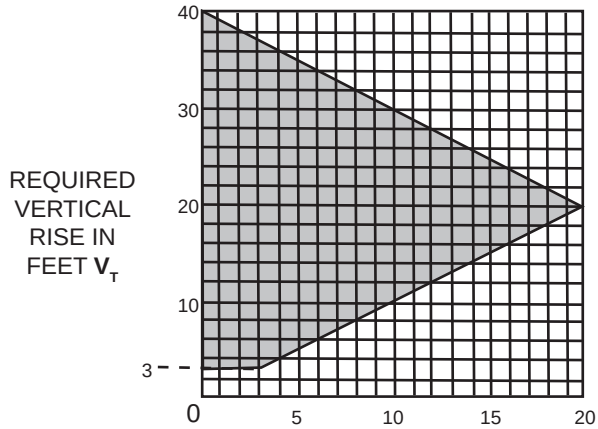

HORIZONTAL VENT RUN PLUS OFFSET IN FEET H_T

The shaded area within the lines represents acceptable values for H_T and V_T

For vent configurations requiring more than one 45° and one 90° elbow, the following formulas apply:
Formula 1: $H_T \leq V_T$
Formula 2: $H_T + V_T \leq 40$ feet

Example:
V_1 = 5 FT
V_2 = 10 FT
$V_T = V_1 + V_2$ = 5 + 10 = 15 FT
H_1 = 3 FT
H_2 = 2.5 FT
$H_R = H_1 + H_2$ = 3 + 2.5 = 5.5 FT
H_O = .03 (one 45° + three 90° elbows - 135°)
= .03 (45 + 270 - 135°) = 5.4 FT
$H_T = H_R + H_O$ = 5.5 + 5.4 = 10.9 FT
$H_T + V_T$ = 10.9 + 15 = 25.9 FT

Formula 1: $H_T \leq V_T$
$10.9 \leq 15$
Formula 2: $H_T + V_T \leq$ **40 FT**
$25.9 \leq 40$
Since both formulas are met, this vent configuration is acceptable.

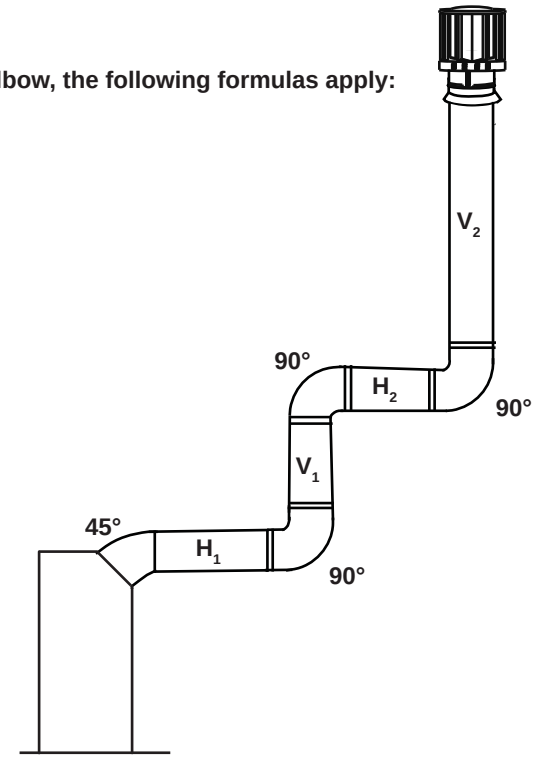

18.3

$(H_T) > (V_T)$

Simple venting configurations.

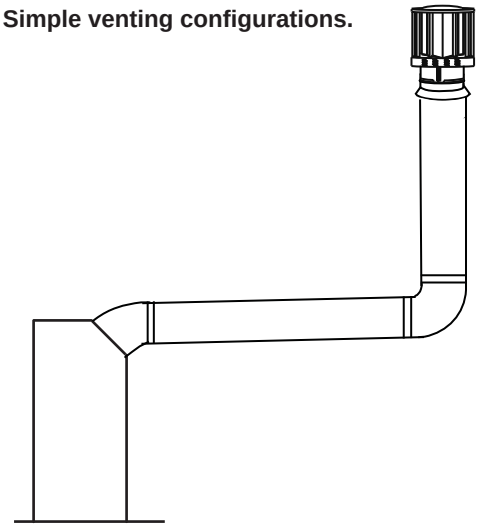

See graph to determine the required vertical rise V_T for the required horizontal run H_T.

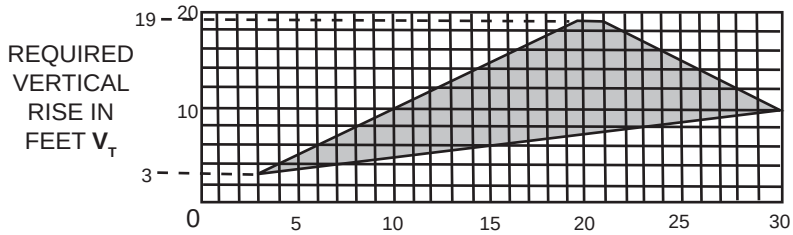

The shaded area within the lines represents acceptable values for H_T and V_T

For vent configurations requiring more than one 45° and one 90° elbow, the following formulas apply:

Formula 1: $H_T \leq 3V_T$
Formula 2: $H_T + V_T \leq 40$ feet

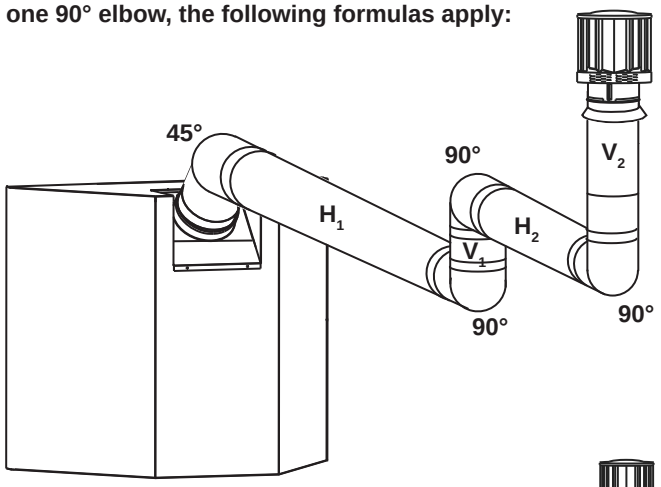

Example:
V_1 = 1 FT
V_2 = 1.5 FT
$V_T = V_1 + V_2$ = 1 + 1.5 = 2.5 FT
H_1 = 6 FT
H_2 = 2 FT
$H_R = H_1 + H_2$ = 6 + 2 = 8 FT
H_O = .03 (one 45° + three 90° elbows - 135°)
= .03 (45 + 270 - 135°) = 5.4 FT
$H_T = H_R + H_O$ = 8 + 5.4 = 13.4 FT
$H_T + V_T$ = 13.4 + 2.5 = 15.9 FT

Formula 1: $H_T \leq 3V_T$
$3V_T$ = 3 x 2.5 = 7.5 FT
13.4 > 7.5

Since this formula is not met, this vent configuration is **<u>un</u>acceptable.**

Formula 2: $H_T + V_T \leq 40$ FT
15.9 ≤ 40

Since only formula 2 is met, this vent configuration in unacceptable and a new fireplace location or vent configuration will need to be established to satisfy both formulas.

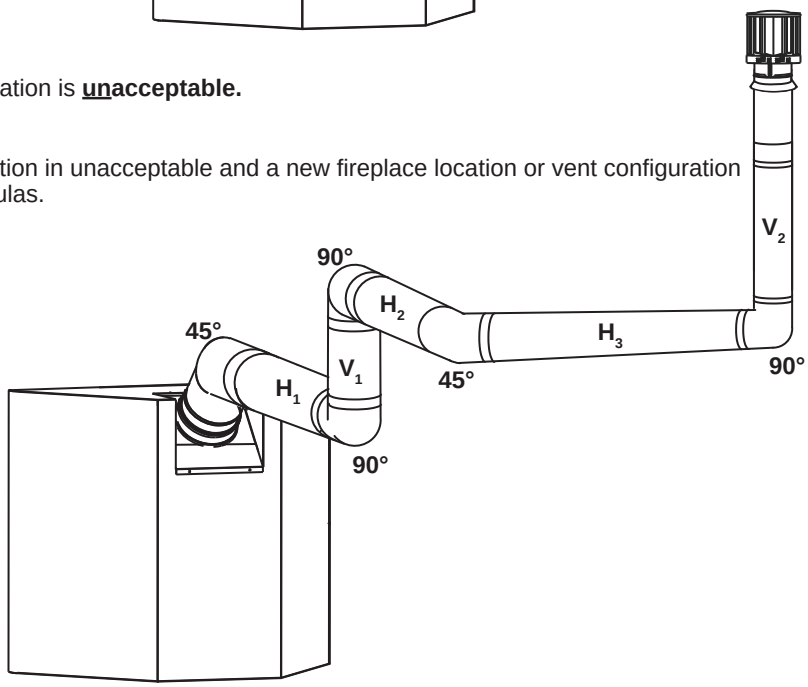

Example:
V_1 = 1.5 FT
V_2 = 8 FT
$V_T = V_1 + V_2$ = 1.5 + 8 = 9.5 FT
H_1 = 1 FT
H_2 = 1 FT
H_3 = 10.75 FT
$H_R = H_1 + H_2 + H_3$ = 1 + 1 + 10.75 = 12.75 FT
H_O = .03 (three 90° elbows + two 45° elbows - 135°)
= .03 (270 + 90 - 135°) = 6.75 FT
$H_T = H_R + H_O$ = 12.75 + 6.75 = 19.5 FT
$H_T + V_T$ = 19.5 + 9.5 = 29 FT

Formula 1: $H_T \leq 3V_T$
$3V_T$ = 3 x 9.5 = 28.5 FT
19.5 ≤ 28.5

Formula 2: $H_T + V_T \leq 40$ FT
29 ≤ 40

Since both formulas are met, this vent configuration is acceptable.

18.3_2A

4.0 INSTALLATION

⚠ WARNING

FOR SAFE AND PROPER OPERATION OF THE APPLIANCE, FOLLOW THE VENTING INSTRUCTIONS EXACTLY.

ALL INNER EXHAUST AND OUTER INTAKE VENT PIPE JOINTS MAY BE SEALED USING EITHER RED RTV HIGH TEMP SILICONE SEALANT W573-0002 (NOT SUPPLIED) OR BLACK HIGH TEMP MILL PAC W573-0007 (NOT SUPPLIED) WITH THE EXCEPTION OF THE APPLIANCE EXHAUST FLUE COLLAR WHICH MUST BE SEALED USING MILL PAC.

IF USING PIPE CLAMPS TO CONNECT VENT COMPONENTS, 3 SCREWS MUST ALSO BE USED TO ENSURE THE CONNECTION CANNOT SLIP OFF.

DO NOT CLAMP THE FLEXIBLE VENT PIPE.

RISK OF FIRE, EXPLOSION OR ASPHYXIATION. IMPROPER SUPPORT OF THE ENTIRE VENTING SYSTEM MAY ALLOW VENT TO SAG AND SEPARATE. USE VENT RUN SUPPORTS AND CONNECT VENT SECTIONS PER INSTALLATION INSTRUCTIONS.

RISK OF FIRE, DO NOT ALLOW LOOSE MATERIALS OR INSULATION TO TOUCH THE VENT PIPE. REMOVE INSULATION TO ALLOW FOR THE INSTALLATION OF THE ATTIC SHIELD AND TO MAINTAIN CLEARANCES TO COMBUSTIBLES.

68.2A

4.1 WALL AND CEILING PROTECTION

⚠ WARNING

DO NOT FILL THE SPACE BETWEEN THE VENT PIPE AND ENCLOSURE WITH ANY TYPE OF MATERIAL. DO NOT PACK INSULATION OR COMBUSTIBLES BETWEEN CEILING FIRESTOPS. ALWAYS MAINTAIN SPECIFIED CLEARANCES AROUND VENTING AND FIRESTOP SYSTEMS. INSTALL WALL SHIELDS AND FIRESTOPS AS SPECIFIED. FAILURE TO KEEP INSULATION OR OTHER MATERIALS AWAY FROM VENT PIPE MAY CAUSE FIRE.

70.1

For clearance to combustible materials from the vent pipe, see “FRAMING” section.

4.2 HORIZONTAL INSTALLATION

⚠ WARNING

THE FIRESTOP ASSEMBLY MUST BE INSTALLED WITH THE VENT SHIELD TO THE TOP.

TERMINALS MUST NOT BE RECESSED INTO A WALL OR SIDING MORE THAN THE DEPTH OF THE RETURN FLANGE OF THE MOUNTING PLATE.

This application occurs when venting through an exterior wall. Having determined the correct height for the air terminal location, cut and frame a hole in the exterior wall as illustrated to accommodate the firestop assembly.

The length of the vent shield may be cut shorter for combustible walls that are less than 8 1/2” thick but the vent shield must extend the full depth of the combustible wall.

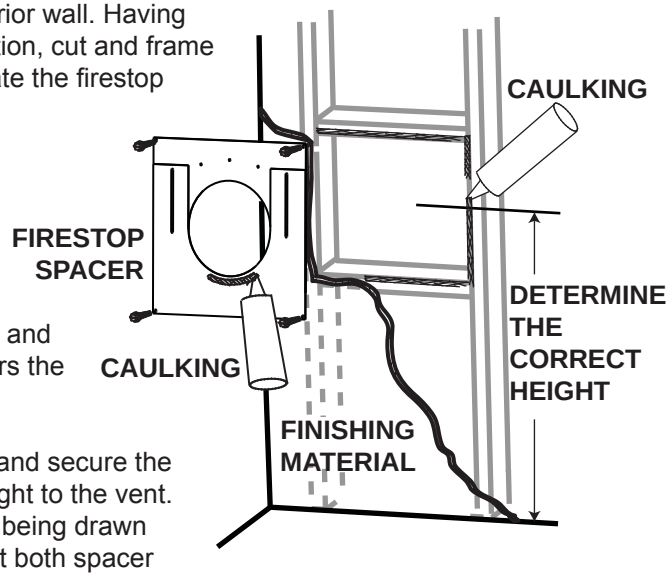

A. Apply a bead of caulking (not supplied) all around and place the firestop top, so that the vent shield covers the top of the vent within the opening.

B. Place the firestop bottom against the firestop top and secure the two together. Adjust the assembly to ensure it is tight to the vent. Secure firestop to wall. This restricts cold air from being drawn into the room or around the appliance. Ensure that both spacer and shield maintain the required clearance to combustibles. Once the vent pipe is installed in its final position, apply sealant W573-0002 (not supplied) between the vent pipe and the firestop spacer as illustrated.

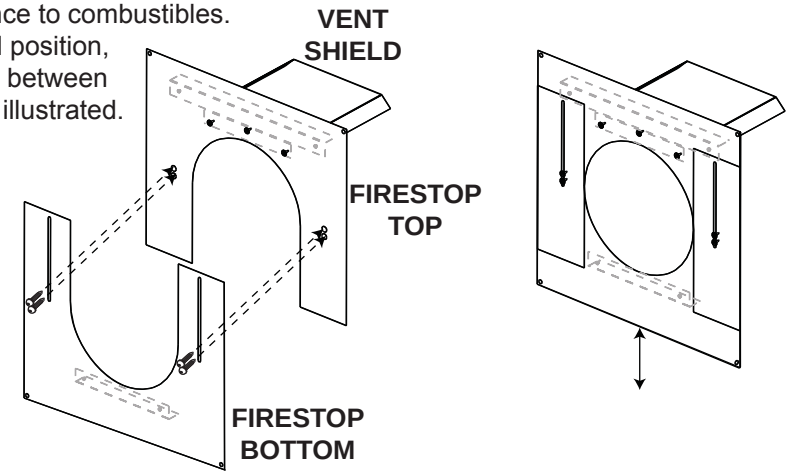

20.3

4.3 VERTICAL INSTALLATION

This application occurs when venting through a roof. Installation kits for various roof pitches are available from your authorized dealer / distributor. See accessories to order specific kits required.

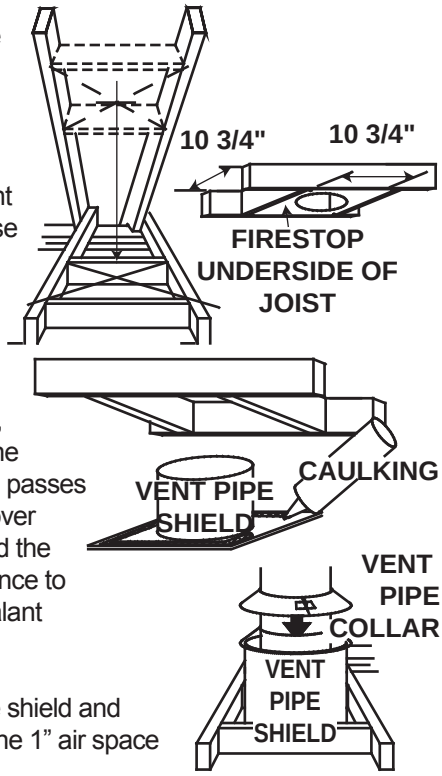

A. Determine the air terminal location, cut and frame a square opening as illustrated in the ceiling and the roof to provide the minimum 1“ clearance between the vent pipe and any combustible material. Try to center the vent pipe location midway between two joists to prevent having to cut them. Use a plumb bob to line up the center of the openings. A vent pipe shield will prevent any materials such as insulation, from filling up the 1” air space around the pipe. Nail headers between the joist for extra support.

B. Apply a bead of caulking (not supplied) to the framework or to the Wolf Steel vent pipe shield plate or equivalent (in the case of a finished ceiling), and secure over the opening in the ceiling. A firestop must be placed on the bottom of each framed opening in a roof or ceiling that the venting system passes through. Apply a bead of caulking all around and place a firestop spacer over the vent shield to restrict cold air from being drawn into the room or around the fireplace. Ensure that both spacer and shield maintain the required clearance to combustibles. Once the vent pipe is installed in its final position, apply sealant between the pipe and the firestop assembly.

C. In the attic, slide the vent pipe collar down to cover up the open end of the shield and tighten. This will prevent any materials, such as insulation, from filling up the 1” air space around the pipe.

21.1

4.4 USING FLEXIBLE VENT COMPONENTS

⚠ WARNING

DO NOT ALLOW THE INNER FLEX PIPE TO BUNCH UP ON HORIZONTAL OR VERTICAL RUNS AND ELBOWS. KEEP IT PULLED TIGHT.

SPACERS ARE ATTACHED TO THE INNER FLEX PIPE AT PREDETERMINED INTERVALS TO MAINTAIN AN EVEN AIR GAP TO THE OUTER FLEX PIPE. THIS GAP IS REQUIRED FOR SAFE OPERATION. A SPACER IS REQUIRED AT THE START, MIDDLE AND END OF EACH ELBOW TO ENSURE THIS GAP IS MAINTAINED. THESE SPACERS MUST NOT BE REMOVED.

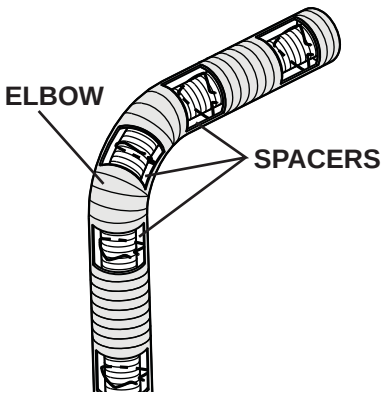

For safe and proper operation of the appliance, follow the venting instructions exactly.
All inner flex pipe and outer flex pipe joints may be sealed using high temperature sealant W573-0002 (not supplied) or the high temperature sealant W573-0007 Mill Pac (not supplied). However, the high temperature sealant W573-0007 Mill Pac (not supplied) must be used on the joint connecting the inner flex pipe and the exhaust flue collar.
Use only approved flexible vent pipe kits marked:

“Wolf Steel Approved Venting” as identified by the stamp only on the outer flex pipe.

22.1

4.4.1 HORIZONTAL AIR TERMINAL INSTALLATION

A. Stretch the inner flex pipe to the required length taking into account the additional length needed for the finished wall surface. Slip the vent pipe a minimum of 2” over the inner sleeve of the air terminal and secure with 3 #8 screws. Apply a heavy bead of the high temperature sealant W573-0007 Mill Pac (not supplied).

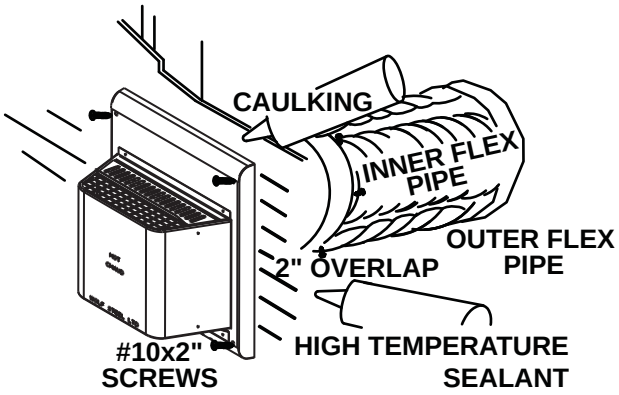

B. Using the outer flex pipe, slide over the outer combustion air sleeve of the air terminal and secure with 3 #8 screws. Seal using high temperature sealant W573-0002 (not supplied).

C. Insert the vent pipes through the firestop maintaining the required clearance to combustibles. Holding the air terminal (lettering in an upright, readable position), secure to the exterior wall and make weather tight by sealing with caulking (not supplied).

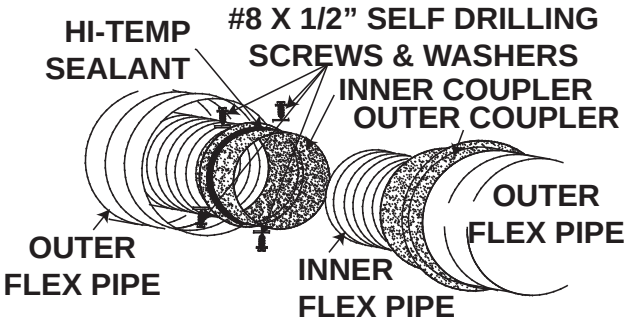

D. If more vent pipe needs to be used to reach the appliance, couple them together as illustrated. The vent system must be supported approximately every 3 feet for both vertical and horizontal runs. Use noncombustible strapping to maintain the minimum clearance to combustibles.

The air terminal mounting plate may be recessed into the exterior wall or siding no greater than the depth of its return flange.

E. The vent heat shield must be installed only when terminating horizontally. Remove the two screws nearest the vent collars on the top of the appliance. Align the vent heat shield (supplied) and secure. Adjust the vent heat shield to touch the firestop spacer.

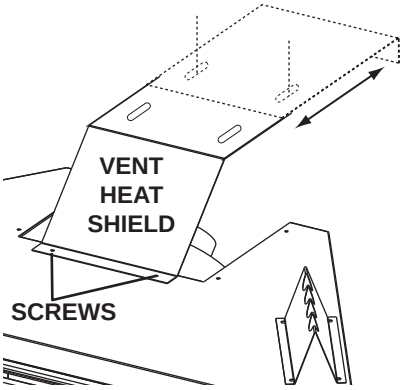

23.5

4.4.2 VERTICAL AIR TERMINAL INSTALLATION

⚠ WARNING

MAINTAIN A MINIMUM 2” SPACE BETWEEN THE AIR INLET BASE AND THE STORM COLLAR.

A. Fasten the roof support to the roof using the screws provided. The roof support is optional. In this case the venting is to be adequately supported using either an alternate method suitable to the authority having jurisdiction or the optional roof support.

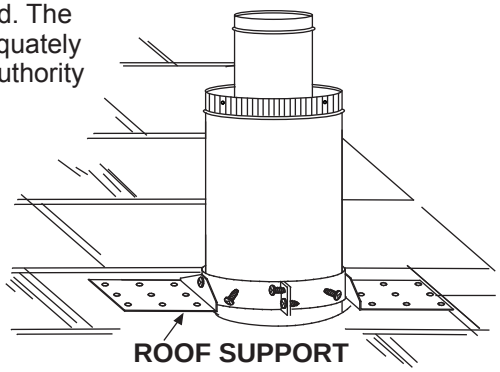

B. Stretch the inner flex pipe to the required length. Slip the inner flex pipe a minimum of 2” over the inner pipe of the air terminal connector and secure with 3 #8 screws. Seal using a heavy bead of high temperature sealant W573-0007 (not supplied).

C. Repeat using the outer flex pipe, using a heavy bead of high temperature sealant W573-0002 (not supplied).

D. Thread the air terminal connector / vent pipe assembly down through the roof. The air terminal must be positioned vertically and plumb. Attach the air terminal connector to the roof support, ensuring that the top of the air terminal is 16” above the highest point that it penetrates the roof.

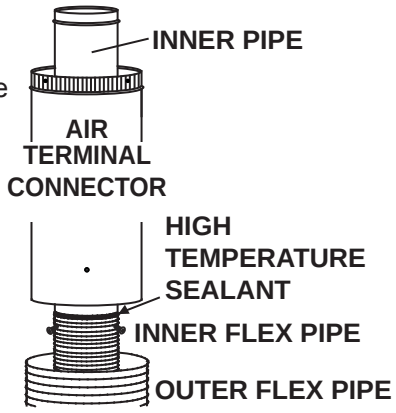

E. Remove nails from the shingles, above and to the sides of the air terminal connector. Place the flashing over the air terminal connector leaving a min. 3/4” of the air terminal connector showing above the top of the flashing. Slide the flashing underneath the sides and upper edge of the shingles. Ensure that the air terminal connector is properly centred within the flashing, giving a 3/4” margin all around. Fasten to the roof. Do not nail through the lower portion of the flashing. Make weather-tight by sealing with caulking. Where possible, cover the sides and top edges of the flashing with roofing material.

F. Aligning the seams of the terminal and air terminal connector, place the terminal over the air terminal connector making sure the vent pipe goes into the hole in the terminal. Secure with the three screws provided.

G. Apply a heavy bead of weatherproof caulking 2” above the flashing. Install the storm collar around the air terminal and slide down to the caulking. Tighten to ensure that a weather-tight seal between the air terminal and the collar is achieved.

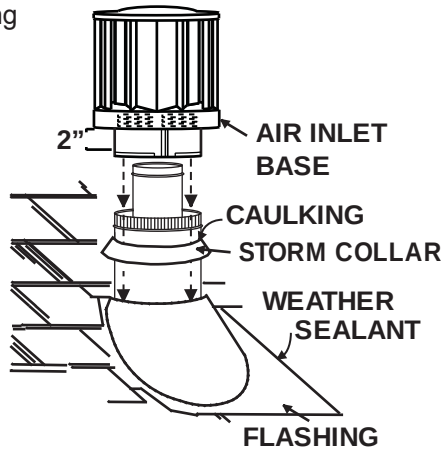

H. If more vent pipe needs to be used to reach the appliance see “HORIZONTAL AIR TERMINAL INSTALLATION” section.

24.1

4.4.3 APPLIANCE VENT CONNECTION

A. Install the inner flex pipe to the appliance. Secure with 3 screws and flat washers. Seal the joint and screw holes using the high temperature sealant W573-0007 (not supplied).

B. Install the outer flex pipe to the appliance. Attach and seal the joints using the high temperature sealant W573-0002 (not supplied).

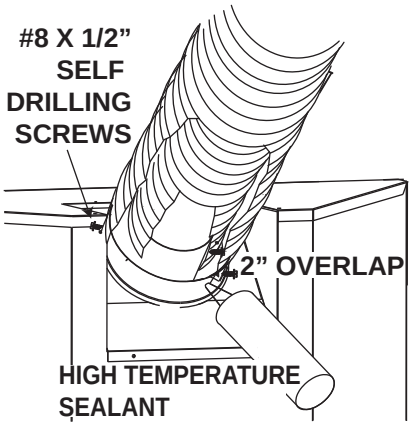

28.2

4.5 VERTICAL THROUGH EXISTING CHIMNEY

⚠ WARNING

RISK OF FIRE!

CO-AXIAL TO CO-LINEAR VENTING CONFIGURATIONS MUST ONLY BE USED IN A NON-COMBUSTIBLE CHIMNEY OR ENCLOSURE. INSTALLATION IN A COMBUSTIBLE ENCLOSURE COULD RESULT IN A FIRE.

This appliance is designed to be attached to a 3” co-linear aluminum flex vent system running the full length of a masonry chimney.

The flex liners accommodate any contours of a masonry chimney, however, it is necessary to keep the flexible liners as straight as possible. The inlet air collar of the termination cap must be connected to the air intake flex liner and the exhaust collar must be connected to the exhaust flexible liner.

Both Simpson Duravent and Selkirk co-linear to co-axial adaptors have been approved on this appliance (**NOTE: A vent adaptor will be required directly off the appliance**). Follow vent manufacturer’s installation instructions.

Different manufacturer’s venting components must not be combined. Once the preferred manufacturer’s appliance adaptor has been attached, the remainder of the system must be that of the same manufacturer.

The only exception to this rule is to use Wolf Steel’s approved 3” flex liner and co-linear termination.

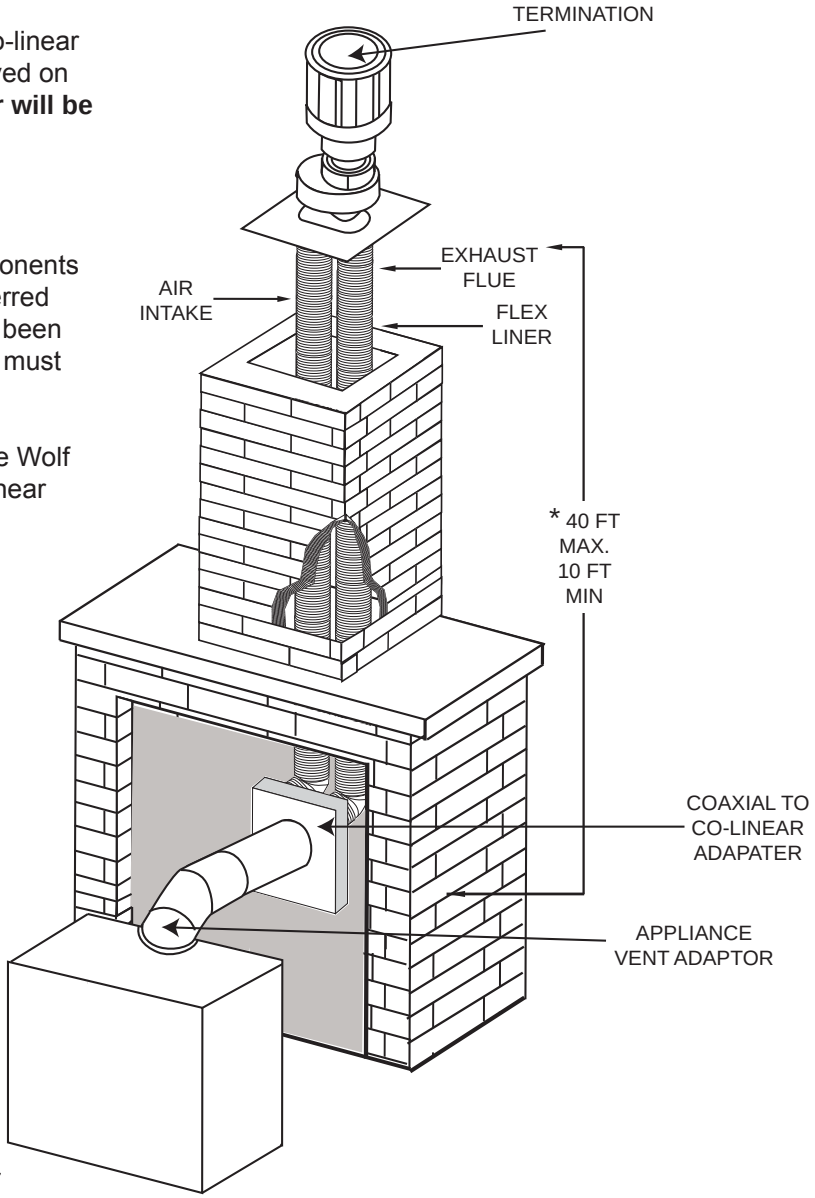

* Measured from appliance flue collar to termination flue collar

7.6

4.6 MOBILE HOME

This appliance is certified to be installed as an OEM (Original Equipment Manufacturer) installation in a manufactured home or mobile home and must be installed in accordance with the manufacturer's instructions and the Manufactured Home Construction and Safety Standard, Title 24 CFR, Part 3280, in the United States or the Mobile Home Standard, CAN/CSA Z240 MH Series, in Canada. This appliance is only for use with the type(s) of gas indicated on the rating plate. A conversion kit is supplied with the mobile home appliance.

This Mobile/Manufactured Home Listed appliance comes factory equipped with a means to secure the unit. Built in appliances are equipped with 1/4" diameter holes located in the front left and right corners of the base. Use #10 hex head screws, inserted through the holes in the base to secure. For free standing products contact your local authorized dealer / distributor for the appropriate securing kit. For mobile home installations, the appliance must be fastened in place. It is recommended that the appliance be secured in all installations. Always turn off the pilot and the fuel supply at the source, prior to moving the mobile home. After moving the mobile home and prior to lighting the appliance, ensure that the logs are positioned correctly.

This appliance is certified to be installed in an aftermarket permanently located, manufactured (mobile) home, where not prohibited by local codes.
This appliance is only for use with the type of gas indicated on the rating plate. This appliance is not convertible for use with other gases, unless a certified kit is used.

Conversion Kits
This appliance is field convertible between Natural Gas (NG) and Propane (LP).
To convert from one gas to another consult your Authorized dealer/distributor.

29.1

4.7 GAS INSTALLATION

⚠ WARNING

RISK OF FIRE, EXPLOSION OR ASPHYXIATION. ENSURE THERE ARE NO IGNITION SOURCES SUCH AS SPARKS OR OPEN FLAMES.

SUPPORT GAS CONTROL WHEN ATTACHING GAS SUPPLY PIPE TO PREVENT DAMAGING GAS LINE.

ALWAYS LIGHT THE PILOT WHETHER FOR THE FIRST TIME OR IF THE GAS SUPPLY HAS RUN OUT WITH THE GLASS DOOR OPENED OR REMOVED. PURGING OF THE GAS SUPPLY LINE SHOULD BE PERFORMED BY A QUALIFIED SERVICE TECHNICIAN. ASSURE THAT A CONTINUOUS GAS FLOW IS AT THE BURNER BEFORE CLOSING THE DOOR. ENSURE ADEQUATE VENTILATION. FOR GAS AND ELECTRICAL LOCATIONS, SEE "DIMENSION" SECTION.

ALL GAS CONNECTIONS MUST BE CONTAINED WITHIN THE APPLIANCE WHEN COMPLETE.

HIGH PRESSURE WILL DAMAGE VALVE. DISCONNECT GAS SUPPLY PIPING BEFORE TESTING GAS LINE AT TEST PRESSURES ABOVE 1/2 PSIG.

VALVE SETTINGS HAVE BEEN FACTORY SET, DO NOT CHANGE.

Installation and servicing to be done by a qualified installer.

A. Move the appliance into position and secure.

B. If equipped with a flex connector the appliance is designed to accept a 1/2" gas supply. Without the connector it is designed to accept a 3/8" gas supply. The appliance is equipped with a manual shut off valve to turn off the gas supply to the appliance.

C. Connect the gas supply in accordance to local codes. In the absence of local codes, install to the current CAN/CSA-B149.1 Installation Code in Canada or to the current National Fuel Gas Code, ANSI Z223.1 / NFPA 54 in the United States.

D. When flexing any gas line, support the gas valve so that the lines are not bent or kinked.

E. The gas line flex-connector should be installed to provide sufficient movement for shifting the burner assembly on it's side to aid with servicing components.

F. Check for gas leaks by brushing on a soap and water solution. **Do not use open flame.**

30.1A

4.8 OPTIONAL WALL SWITCH INSTALLATION

⚠ WARNING

DO NOT CONNECT EITHER THE WALL SWITCH, THERMOSTAT OR GAS VALVE DIRECTLY TO 110 VOLT ELECTRICITY.

For ease of accessibility, an optional remote wall switch or millivolt thermostat may be installed in a convenient location. Route a 2 strand, solid core millivolt wire from the valve to the wall switch or millivolt thermostat. The recommended maximum lead length depends on wire size:

WIRE SIZE	MAX. LENGTH
14 gauge	100 feet
16 gauge	60 feet
18 gauge	40 feet

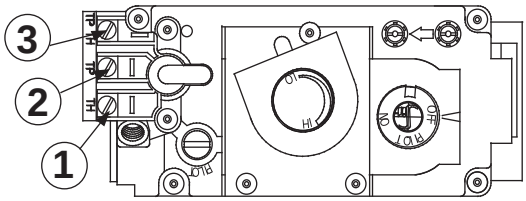

Disconnect the existing wires from terminals 1 and 3 (from the ON/OFF switch) and replace with the leads from the wall switch / millivolt thermostat.

50.1

5.0 FRAMING

WARNING
RISK OF FIRE!
IN ORDER TO AVOID THE POSSIBILITY OF EXPOSED INSULATION OR VAPOUR BARRIER COMING IN CONTACT WITH THE APPLIANCE BODY, IT IS RECOMMENDED THAT THE WALLS OF THE APPLIANCE ENCLOSURE BE “FINISHED” (IE: DRYWALL / SHEETROCK), AS YOU WOULD FINISH ANY OTHER OUTSIDE WALL OF A HOME. THIS WILL ENSURE THAT CLEARANCE TO COMBUSTIBLES IS MAINTAINED WITHIN THE CAVITY.
DO NOT NOTCH THE FRAMING AROUND THE APPLIANCE STAND-OFFS. FAILURE TO MAINTAIN AIR SPACE CLEARANCE MAY CAUSE OVER HEATING AND FIRE. PREVENT CONTACT WITH SAGGING OR LOOSE INSULATION OR FRAMING AND OTHER COMBUSTIBLE MATERIALS. BLOCK OPENING INTO THE CHASE TO PREVENT ENTRY OF BLOWN-IN INSULATION. MAKE SURE INSULATION AND OTHER MATERIALS ARE SECURED.
WHEN CONSTRUCTING THE ENCLOSURE ALLOW FOR FINISHING MATERIAL THICKNESS TO MAINTAIN CLEARANCES. FRAMING OR FINISHING MATERIAL CLOSER THAN THE MINIMUMS LISTED MUST BE CONSTRUCTED ENTIRELY OF NON-COMBUSTIBLE MATERIALS. MATERIALS CONSISTING ENTIRELY OF STEEL, IRON, BRICK, TILE, CONCRETE, SLATE, GLASS OR PLASTERS, OR ANY COMBINATION THEREOF ARE SUITABLE. MATERIALS THAT ARE REPORTED AS PASSING ASTM E 136, STANDARD TEST METHOD FOR BEHAVIOUR OF MATERIALS IN A VERTICAL TUBE FURNACE AT 750°C AND UL763 SHALL BE CONSIDERED NON-COMBUSTIBLE MATERIALS.
MINIMUM CLEARANCE TO COMBUSTIBLES MUST BE MAINTAINED OR A SERIOUS FIRE HAZARD COULD RESULT.
THE APPLIANCE REQUIRES A MINIMUM ENCLOSURE HEIGHT. MEASURE FROM THE APPLIANCE BASE.
IF STEEL STUD FRAMING KITS WITH CEMENT BOARD ARE PROVIDED, THEY MUST BE INSTALLED.

71.1

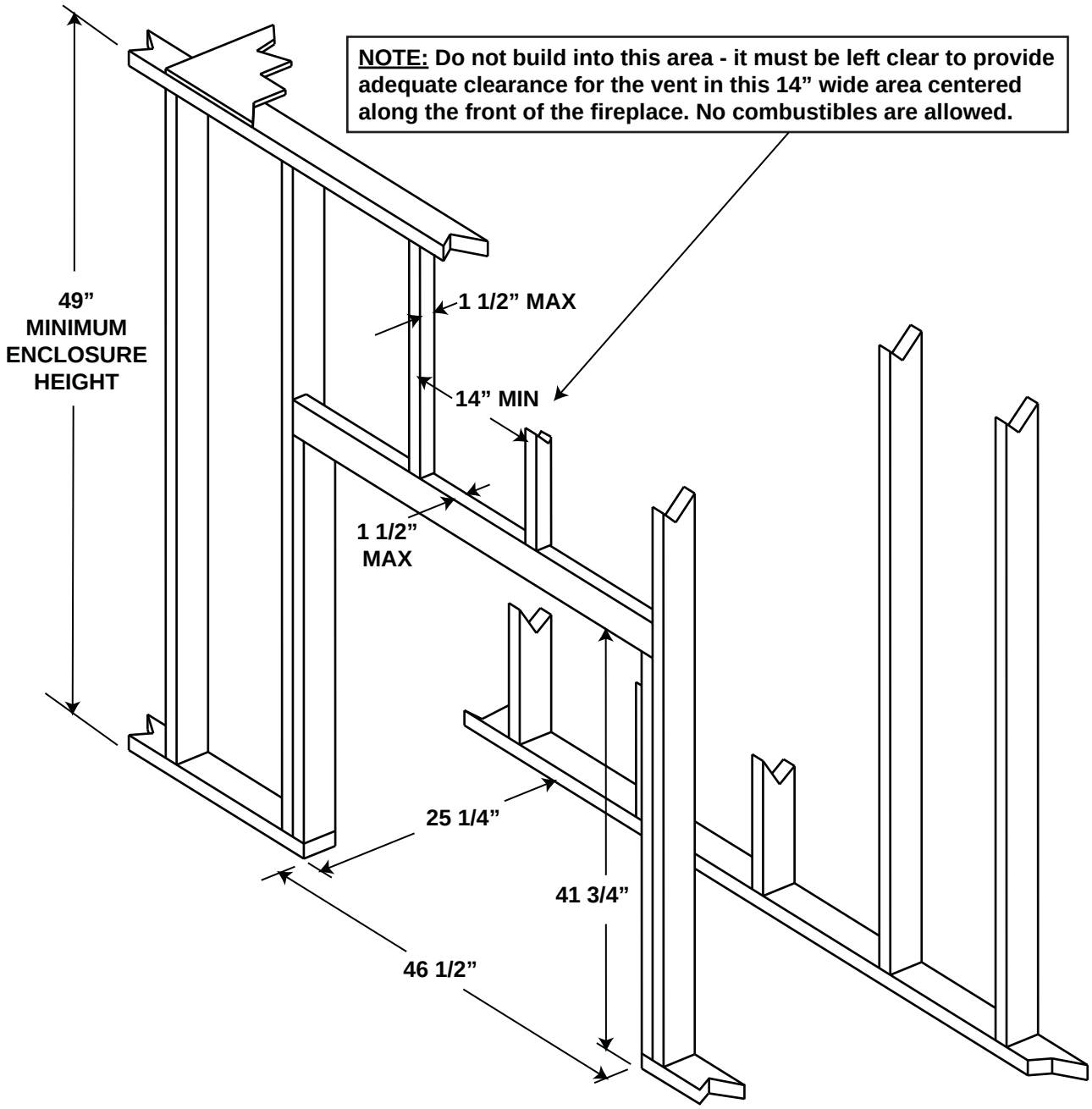
NOTE: Do not build into this area - it must be left clear to provide adequate clearance for the vent in this 14” wide area centered along the front of the fireplace. No combustibles are allowed.
49” MINIMUM ENCLOSURE HEIGHT
1 1/2” MAX
14” MIN
1 1/2” MAX
25 1/4”
41 3/4”
46 1/2”

5.1 MINIMUM CLEARANCE TO COMBUSTIBLES

Minimum clearance to combustible construction from appliance and vent surfaces:	
Combustible framing:	
Sides, back, bottom and top of the appliance	0" to standoffs
Non-combustible finishing:	
Top	6 1/2" to appliance edge
Combustible framing:	
Sides and bottom	0" to appliance edge
Enclosure top	13 1/2" to top of appliance
Recessed depth	25"
Top, sides and bottom of vent pipe	2"
Ceiling	54" from bottom of appliance

***HORIZONTAL VENT SECTIONS:** A minimum clearance of 2" all around the vent pipe on all horizontal runs to combustibles is required. Use firestop spacer W010-2116 (supplied).
VERTICAL VENT SECTIONS: A minimum of 1" all around the vent pipe on all vertical runs to combustibles is required except for clearances in appliance enclosures. Use firestop spacer W500-0367 (not supplied).

It is best to frame your appliance after it is positioned and the vent system is installed. Use 2x4's and frame to local building codes. It is not necessary to install a hearth extension with this appliance system.

When roughing in the appliance, raise the appliance to accommodate for the thickness of the finished floor materials, i.e. tile, carpeting, hard wood, which if not planned for will interfere with the opening of the lower access door and the installation of many decorative flashing accessories.

Combustible materials may be installed flush with the front of the appliance but must not cover or protrude past any of the black face-areas of the appliance. Non-combustible material (brick, stone or ceramic tile) may protrude in these areas.

⚠ WARNING

NON-COMBUSTIBLE FINISHING MATERIALS REQUIRED SUCH AS BRICK AND TILE CAN BE EXTENDED OVER THE BLACK FACE OF THE APPLIANCE.

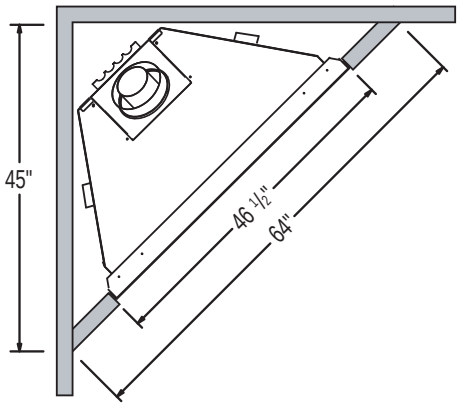

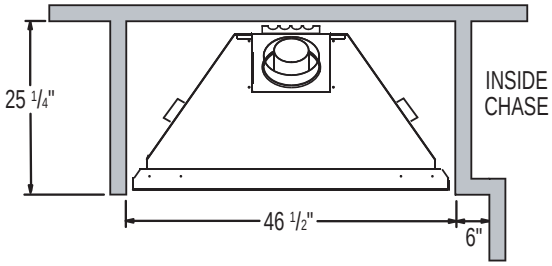

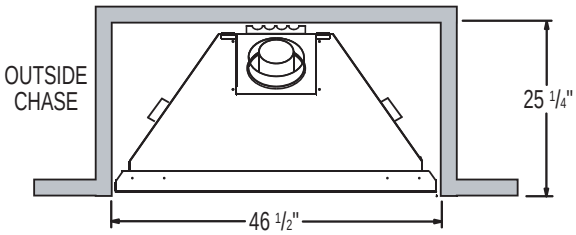

The finishing material can be installed below the top opening a maximum of 1 1/2". Enough clearance to the door latches must be maintained to allow for proper door installation / removal.

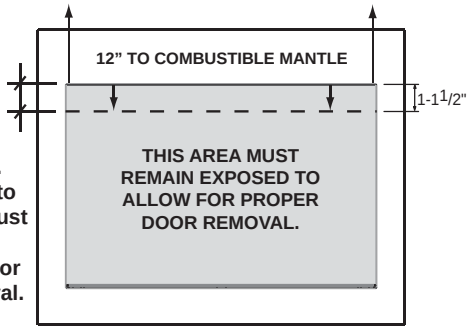

5.2 INSTALLING STANDOFFS

This appliance is supplied with two standoffs. For convenience, the standoffs have been shipped flat and located on the top at the front. Before framing ensure the standoffs are bent up and screwed into place ensuring a height of 4.5".

<u>NOTE:</u> The information and dimensions in this section represent the minimum clearances to combustible materials.

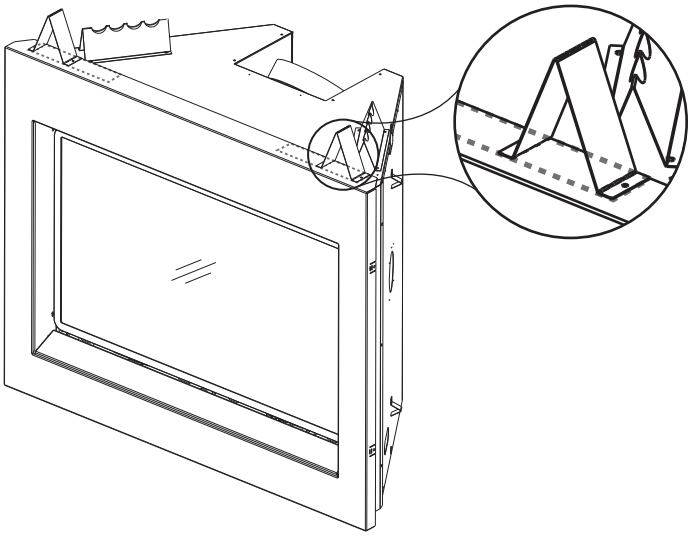

5.3 MINIMUM ENCLOSURE CLEARANCES

The appliance requires a minimum enclosure height of 49“. For temperature requirements, the enclosure space around and above the appliance must be left unobstructed. This appliance requires a minimum of 6 1/2" of cement board or non-combustible equivalent above the top of the appliance.

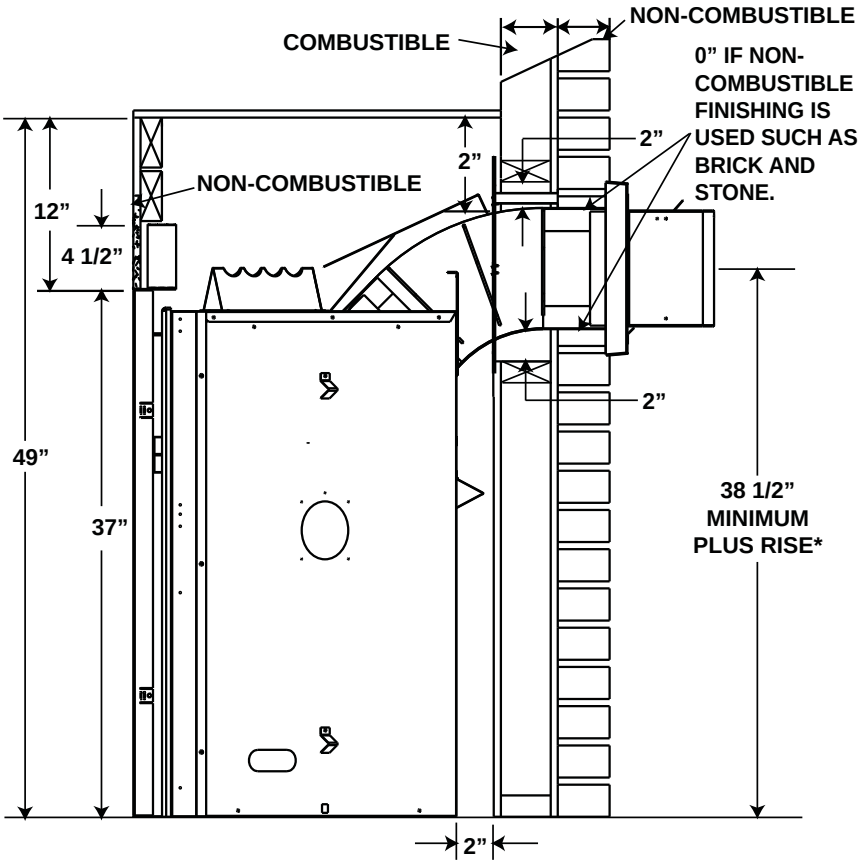

* See Venting Section

WARNING

USE ONLY NON-COMBUSTIBLE MATERIAL SUCH AS CEMENT BOARD, CERAMIC TILE, MARBLE, ETC. WHEN FINISHING TO THE FIREPLACE. DO NOT USE WOOD OR DRYWALL.

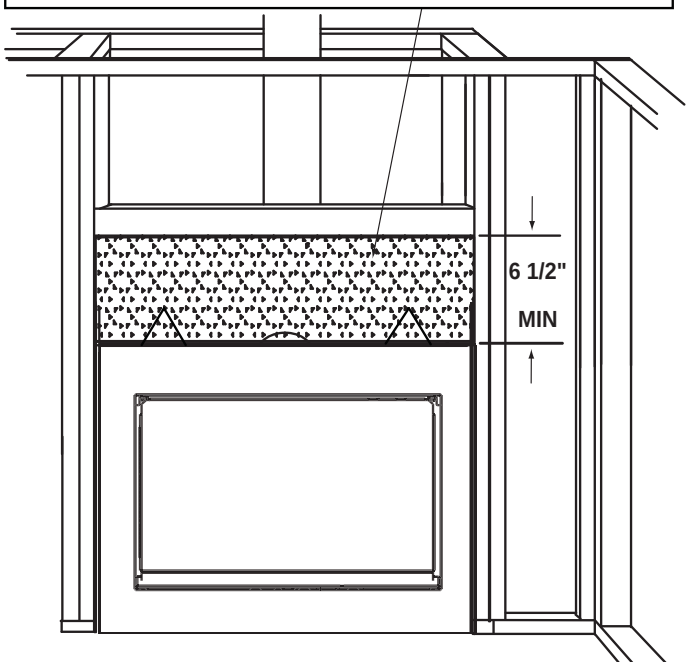

5.4 ALCOVE FRAMING

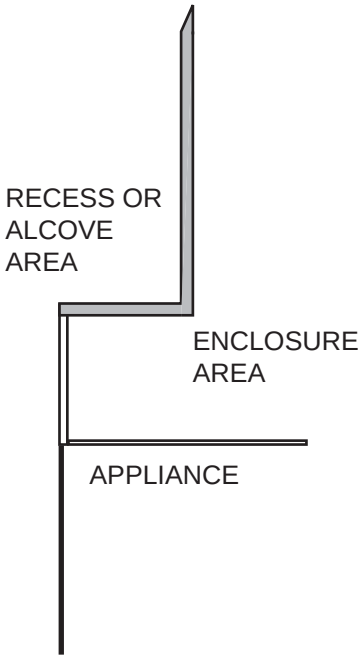

<u>NOTE:</u> Recesses or alcoves above the appliance can be made as deep as desired provided the minimum clearances to combustibles are maintained.

Non-combustible material can be used, provided the minimum clearances to combustible materials are applied.

The minimum enclosure volume must be increased by no less than the volume of the recess. This adjustment can be made by increasing any or all of the height, width and depth of the enclosure.

71.2

5.5 MINIMUM MANTEL CLEARANCES

⚠ WARNING

RISK OF FIRE, MAINTAIN ALL SPECIFIED AIR SPACE CLEARANCES TO COMBUSTIBLES. FAILURE TO COMPLY WITH THESE INSTRUCTIONS MAY CAUSE A FIRE OR CAUSE THE APPLIANCE TO OVERHEAT. ENSURE ALL CLEARANCES (I.E. BACK, SIDE, TOP, VENT, MANTEL, FRONT, ETC.) ARE CLEARLY MAINTAINED.

WHEN USING PAINT OR LACQUER TO FINISH THE MANTEL, THE PAINT OR LACQUER MUST BE HEAT RESISTANT TO PREVENT DISCOLOURATION.

73.1

Combustible mantel clearances can vary according to the mantel depth. Use the graph to help evaluate the clearance needed. Curtains, above the appliance, must not be positioned lower than the 12" distance required for the 2" combustible mantel. These same requirements apply to any combustibles protruding on either side of the appliance.

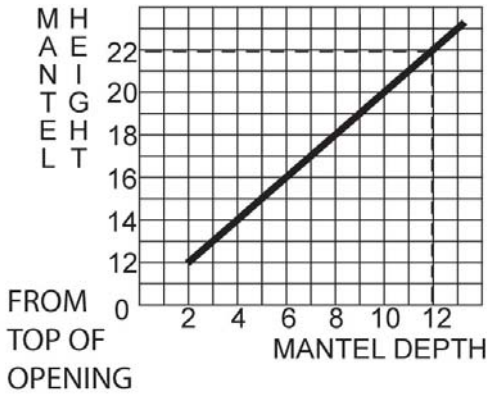

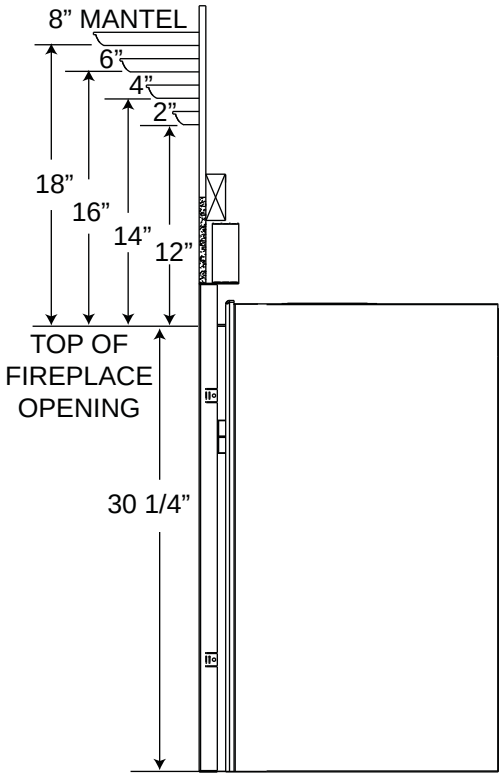

6.0 FINISHING

⚠ WARNING

RISK OF FIRE!

NEVER OBSTRUCT THE FRONT OPENING OF THE APPLIANCE.

THE FRONT OF THE APPLIANCE MUST BE FINISHED WITH ANY NON-COMBUSTIBLE MATERIALS SUCH AS BRICK, MARBLE, GRANITE, ETC., PROVIDED THAT THESE MATERIALS DO NOT GO BELOW THE SPECIFIED DIMENSION AS ILLUSTRATED.

DO NOT STRIKE, SLAM OR SCRATCH GLASS. DO NOT OPERATE APPLIANCE WITH GLASS REMOVED, CRACKED, BROKEN OR SCRATCHED.

FACING AND/OR FINISHING MATERIAL MUST NEVER OVERHANG INTO THE APPLIANCE OPENING.

72.1A

6.1 DOOR INSTALLATION / REMOVAL

⚠ WARNING

GLASS MAY BE HOT, DO NOT TOUCH GLASS UNTIL COOLED.

THE DOOR LATCHES ARE PART OF A SAFETY SYSTEM AND MUST BE PROPERLY ENGAGED. DO NOT OPERATE THE APPLIANCE WITH LATCHES DISENGAGED.

FACING AND/OR FINISHING MATERIALS MUST NOT INTERFERE WITH AIR FLOW THROUGH AIR OPENINGS, LOUVRES OPENINGS, OPERATION OF LOUVRES OR DOORS OR ACCESS FOR SERVICE. OBSERVE ALL CLEARANCES WHEN APPLYING COMBUSTIBLE MATERIALS.

BEFORE DOOR IS REMOVED TURN THE APPLIANCE OFF AND WAIT UNTIL APPLIANCE IS COOL TO THE TOUCH. DOORS ARE HEAVY AND FRAGILE SO HANDLE WITH CARE.

75.1

Before the glass door can be removed, the optional front, louvres and insets must be removed.

The glass door is secured to the top front edge of the firebox with two latches. Pull the handles of the latches forward, then lift the latches out from the door frame to release the top of the door. Next, pivot the door forward until the top edge clears the front of the appliance. Carefully grip the sides of the door lifting it out from the retainer along the bottom of the door.

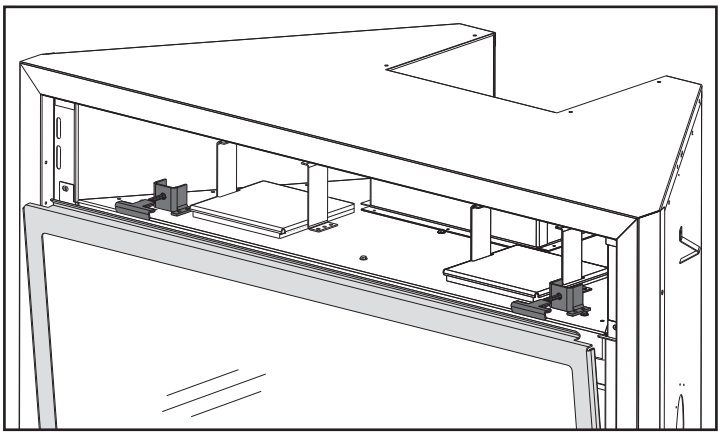

6.2 REMOVING THE VALVE ACCESS DOOR

The valve access door rotates on the pins attached to the side frame. Lift the valve access door off the pins to operate the main glass door.

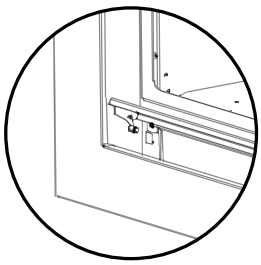

6.3 DOOR TRIM

This appliance comes complete with top door trim (W715-0729).

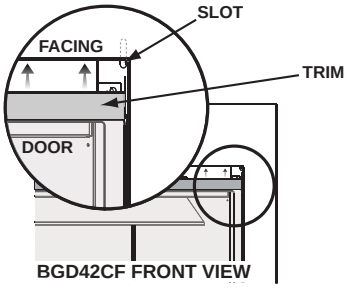

BGD42CF FRONT VIEW

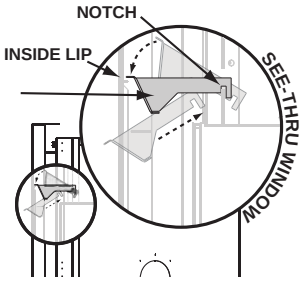

BGD42CF SIDE VIEW

A. Guide the arms of the trim into the slots that are slightly hidden under the facing through the opening between the top of the door and the bottom edge of the facing as illustrated in the front view.

B. Slide the arm into the slot far enough to allow the front edge of the trim to go in behind the facing.

C. Let the bracket come forward towards the back of the facing and allow the trim to rest on the inside lip, this position will allow the notch on the arm of the trim to fall into place on the edge of the slot.

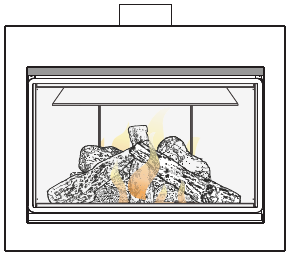
BGD42CF WITH TOP DOOR TRIM INSTALLED

6.4 GRATE INSTALLATION

The grate for this appliance has been removed for shipping purposes. The grate must be installed before the logs are installed.
Remove the packaging from the grate and install onto the two pins as illustrated.

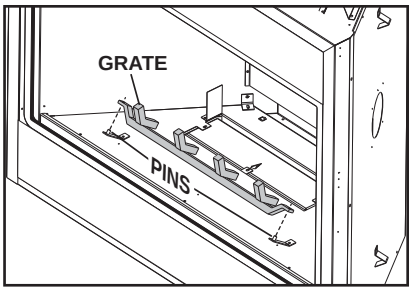

6.5 LOG PLACEMENT

PHAZER™ logs and glowing embers, exclusive to Napoleon® Fireplaces, provide a unique and realistic glowing effect that is different in every installation. Take the time to carefully position the glowing embers for a maximum glowing effect. Log colours may vary. During the initial use of the appliance, the colours will become more uniform as colour pigments burn in during the heat activated curing process.

A. Place the cutout in the bottom of log #1 behind the pilot assembly. Rest the log against the back wall of the firebox.

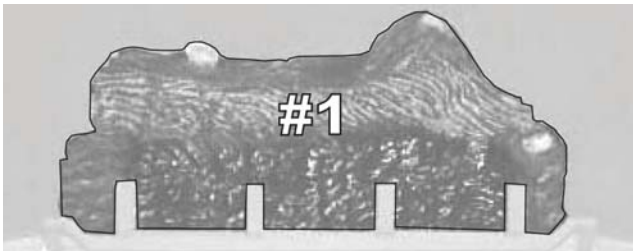

B. Move the two small logs (#2 & #3) into position, lining up the studs located on the burner with the holes on the bottom of the logs.

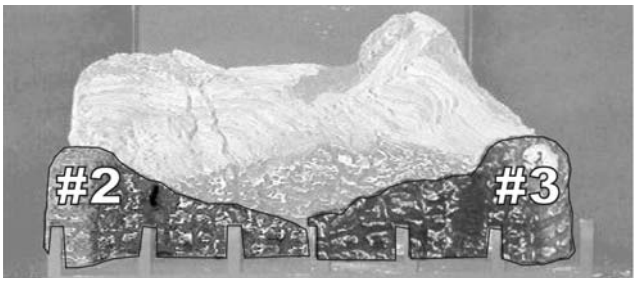

C. Place the bottom of the left crossover log (#4) onto the stud on the left side of the log support. The top of the log should rest in the pocket on the back log.

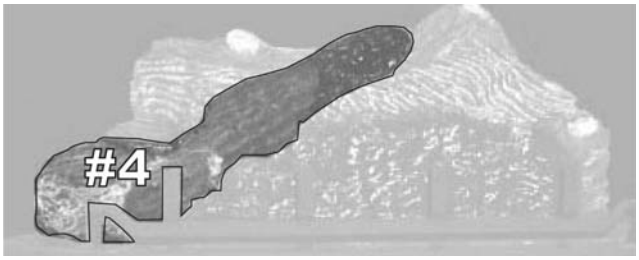

D. Place the bottom of the right crossover log (#5) onto the stud on the right side of the log support. The top of the log should rest in the pocket on the left crossover log (#4).

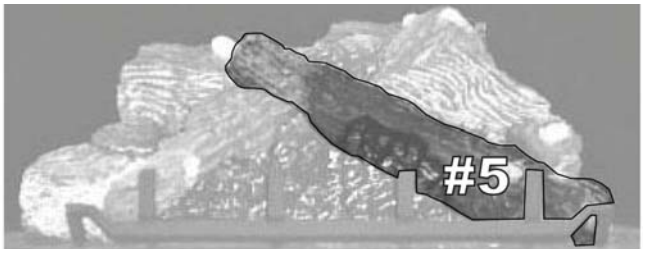

6.6 GLOWING EMBERS

Tear the embers into pieces and place along the front row of ports covering all of the burner area in front of the small logs (#2 & #3). Care should be taken to shred the embers into thin, small irregular pieces as only the exposed edges of the fibre hairs will glow. The ember material will only glow when exposed to direct flame; however, care should be taken to not block the burner ports. Blocked burner ports can cause an incorrect flame pattern, carbon deposits and delayed ignition. Phazer™ logs glow when exposed to direct flame. Use only certified "glowing embers" and Phazer™ logs available from your Napoleon® dealer.

6.7 CHARCOAL EMBERS

Randomly place the charcoal embers along the front and sides of the log support tray in a realistic manner.
Fine dust found in the bottom of the bag should not be used.
<u>NOTE:</u> Charcoal embers are not to be placed on the burner.

32.1

6.8 VERMICULITE

Sprinkle vermiculite around the charcoal embers.
NOTE: Vermiculite is not to be placed on the burner.

33.1

6.9 CHARCOAL LUMPS

⚠ WARNING

CHARCOAL EMBERS, VERMICULITE AND CHARCOAL LUMPS ARE NOT TO BE PLACED ON THE BURNER.

Place the lumps in front of the logs in a realistic manner taking care not to block any of the burner ports.

34.1

6.10 LOGO PLACEMENT

Remove the backing of the logo supplied and place on the glass viewing door, as indicated.

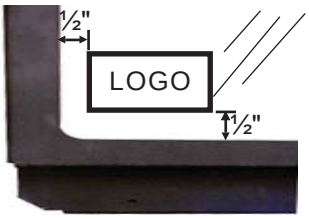

97.1

7.0 OPTIONAL BLOWER INSTALLATION

⚠ WARNING

RISK OF FIRE AND ELECTRICAL SHOCK.

TURN OFF THE GAS AND ELECTRICAL POWER BEFORE SERVICING THIS APPLIANCE.

USE ONLY WOLF STEEL APPROVED OPTIONAL ACCESSORIES AND REPLACEMENT PARTS WITH THIS APPLIANCE. USING NON-LISTED ACCESSORIES (BLOWERS, DOORS, LOUVRES, TRIMS, GAS COMPONENTS, VENTING COMPONENTS, ETC.) COULD RESULT IN A SAFETY HAZARD AND WILL VOID THE WARRANTY AND CERTIFICATION.

ENSURE THAT THE FAN'S POWER CORD IS NOT IN CONTACT WITH ANY SURFACE OF THE APPLIANCE TO PREVENT ELECTRICAL SHOCK OR FIRE DAMAGE. DO NOT RUN THE POWER CORD BENEATH THE APPLIANCE.

THE WIRE HARNESS PROVIDED IN THE BLOWER KIT IS A UNIVERSAL HARNESS. WHEN INSTALLED, ENSURE THAT ANY EXCESS WIRE IS CONTAINED, PREVENTING IT FROM MAKING CONTACT WITH MOVING OR HOT OBJECTS.

51.5

7.1 ACCESSING THE BLOWER

A. Remove the main door, see "DOOR INSTALLATION / REMOVAL" section.

B. Carefully remove the logs.

C. Remove the grate by lifting it off of the two securing pins.

D. Remove the 6 screws as illustrated and lift out the log support. Be careful not to lose the spacers for the screws indicated.

E. Remove the 7 perimeter screws as illustrated and lift out the burner base. (The gas line flex-connector should provide sufficient movement to permit shifting the burner assembly to the side).

F. Reverse procedure to re-assemble.

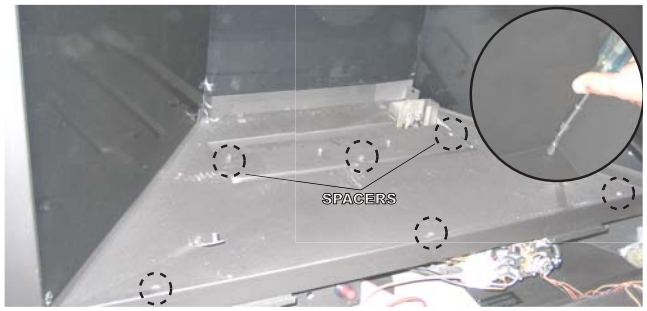

7.2 INSTALLING THE BLOWER

INSTALLATION TO BE DONE BY A QUALIFIED INSTALLER and must be electrically connected and grounded in accordance with local codes. In the absence of local codes, use the current CSA C22.1 Canadian electrical code in Canada or the ANSI / NFPA 70 National Electrical Code in the United States.

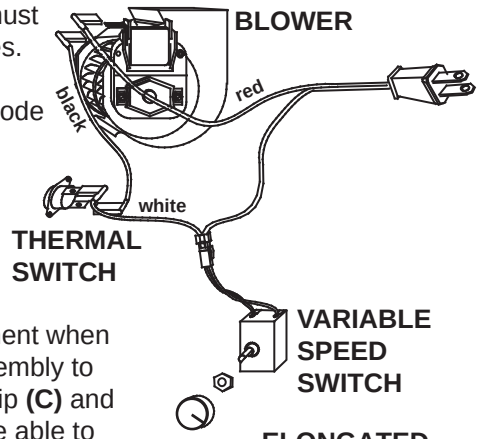

If the appliance was not previously equipped with a blower: Route a grounded 2-wire, 60hz power cable to the receptacle / junction box. At this point, it must be strain relieved and insulated.

The three slots on the blower mounting bracket allow ease of adjustment when attaching the blower. For a quiet running blower, do not allow the assembly to sit on the firebox base. Slide the vibration reducing pad **(A)** into the clip **(C)** and up against the threaded stud **(B)** at the other end. The blower must be able to be positioned entirely onto the pad.

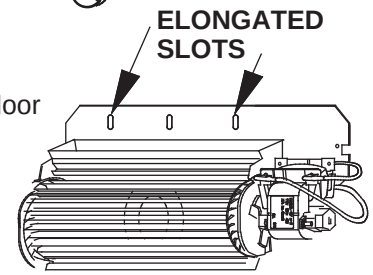

To ease installation of the blower, remove the hinge screen and valve control door (lower louvres) from the base of the appliance.

Tilt the blower onto its side. Slide it past the controls and into the clip **(C)**. Secure to the threaded stud using the lock washer and wing nut provided. Ensure that the blower does not touch the appliance base or the firebox.

Attach the connectors from the black and white wires to the thermal switch and secure the thermal switch bracket to the bottom left of the unit using the screws provided. Ensure that the thermal switch touches the firebox wall.

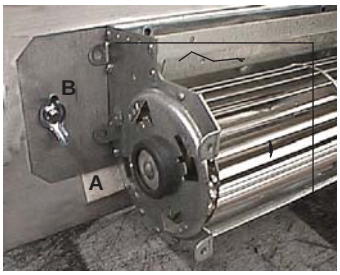

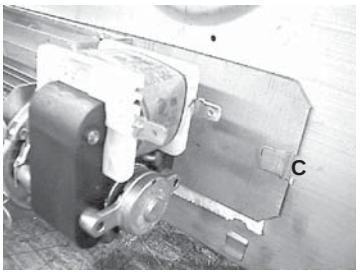

Attach the connectors from the black and red wires to the blower.

Attach and secure the variable speed switch using the nut provided. Plug the harness cord into the receptacle.The wire harness provided in this kit is a universal harness. When installed, ensure that any excess wire is contained, preventing it from making contact with moving or hot objects.

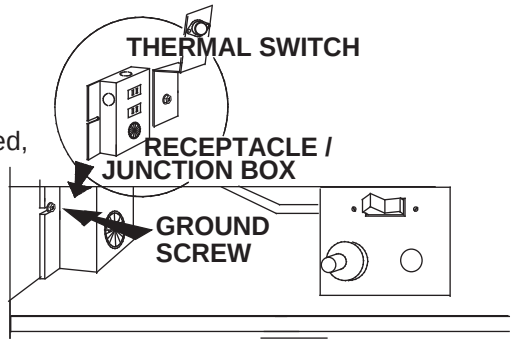

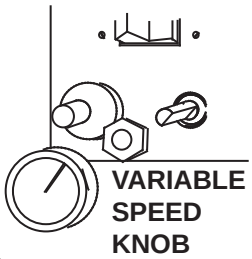

Because the blower is thermally activated, when turned on, it will automatically start approximately 10 minutes after lighting the appliance and will run for approximately 30-45 minutes after the appliance has been turned off. Use of the fan increases the output of heat. Drywall dust will penetrate into the blower bearings, causing irreparable damage. Care must be taken to prevent drywall dust from coming into contact with the blower or its compartment. Any damage resulting from this condition is not covered by the warranty policy.

51.1

8.0 OPERATION

⚠ WARNING

IF YOU DO NOT FOLLOW THESE INSTRUCTIONS EXACTLY, A FIRE OR EXPLOSION MAY RESULT CAUSING PROPERTY DAMAGE, PERSONAL INJURY OR LOSS OF LIFE.

ALWAYS LIGHT THE PILOT WHETHER FOR THE FIRST TIME OR IF THE GAS SUPPLY HAS RUN OUT WITH THE GLASS DOOR OPENED OR REMOVED.

Ensure that a continuous gas flow is at the burner before installing the door. When lit for the first time, the appliance will emit an odor for a few hours. This is a normal temporary condition caused by the "burn-in" of paints and lubricants used in the manufacturing process and will not occur again.

After extended periods of non-operation such as following a vacation or a warm weather season, the appliance may emit a slight odor for a few hours. This is caused by dust particles in the heat exchanger burning off. In both cases, open a window to sufficiently ventilate the room.

FOR YOUR SAFETY READ BEFORE LIGHTING:

A. This appliance is equipped with a pilot which must be lit by hand while following these instructions exactly.

B. Before operating smell all around the appliance area for gas and next to the floor because some gas is heavier than air and will settle on the floor.

C. Use only your hand to turn the gas control knob. Never use tools. If the knob will not turn by hand, do not try to repair it. Call a qualified service technician. Force or attempted repair may result in a fire or explosion.

D. Do not use this appliance if any part has been under water. Immediately call a qualified service technician to inspect the appliance and replace any part of the control system and any gas control which has been under water.

WHAT TO DO IF YOU SMELL GAS:

- Turn off all gas to the appliance.
- Open windows.
- Do not try to light any appliance.
- Do not touch any electric switch; do not use any phone in your building.
- Immediately call your gas supplier from a neighbor's phone. Follow the gas supplier's instructions.
- If you cannot reach your gas supplier, call the fire department.

GAS KNOB

LIGHTING INSTRUCTIONS:

WARNING: The gas valve has an interlock device which will not allow the pilot burner to be lit until the thermocouple has cooled. Allow approximately 60 seconds for the thermocouple to cool.

When lighting and re-lighting, the gas knob cannot be turned from pilot to off unless the knob is depressed slightly.

1. Stop! Read the above safety information on this label.
2. Turn off all electric power to the appliance.
3. Turn the gas knob clockwise ↷ to off.
4. Wait five (5) minutes to clear out any gas. If you smell gas including near the floor. Stop! Follow "B" in the above safety information on this label. If you don't smell gas go the next step.
5. Turn gas knob counter-clockwise ↶ to pilot.
6. Depress slightly and hold gas knob while lighting the pilot with the push button igniter. Keep knob depressed for one minute, then release. If pilot does not continue to burn, repeat steps 3 through 5.
7. With pilot lit, depress and turn gas knob counter-clockwise ↶ to on.
8. If equipped with remote on-off switch / thermostat, main burner may not come on when you turn valve to on. Remote switch must be in the on position to ignite burner.
9. Turn on all electric power to the appliance.

TO TURN OFF GAS

1. Turn off all electric power to the appliance if service is to be performed.
2. Push in gas control knob slightly and turn clockwise ↷ to off. Do not force.

TURN THE CONTROL VALVE TO THE OFF POSITION WHEN HEATER IS NOT IN USE.

47.2

9.0 ADJUSTMENTS

9.1 PILOT BURNER ADJUSTMENT

Adjust the pilot screw to provide properly sized flame. Turn in a clockwise direction to reduce the gas flow.

Inlet pressure can be checked by turning screw (A) counter-clockwise until loosened and then placing pressure gauge tubing over the test point. Gauge should read 7” (minimum 4.5”) water column for natural gas or 13” (11” minimum) water column for propane. Check that main burner is operating on “HI”.

Outlet pressure can be checked the same as above using screw (B). Gauge should read 3.5” water column for natural gas or 10” water column for propane. Check that main burner is operating on “HI”.

AFTER TAKING PRESSURE READINGS, TIGHTEN SCREWS FIRMLY TO SEAL. DO NOT OVER TORQUE. LEAK TEST.

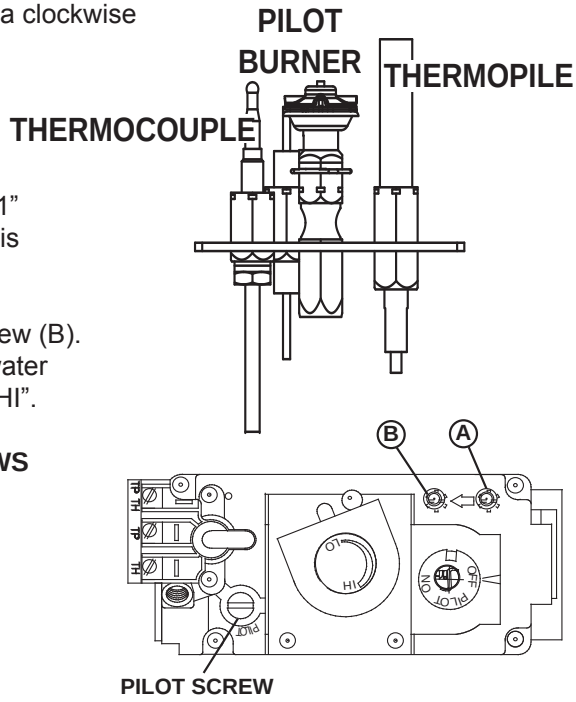

39.3

9.2 VENTURI ADJUSTMENT

This appliance has an air shutter that has been factory set open according to the chart below:

Regardless of venturi orientation, closing the air shutter will cause a more yellow flame, but can lead to carboning. Opening the air shutter will cause a more blue flame, but can cause flame lifting from the burner ports. The flame may not appear yellow immediately; allow 15 to 30 minutes for the final flame colour to be established.

AIR SHUTTER ADJUSTMENT MUST ONLY BE DONE BY A QUALIFIED INSTALLER!

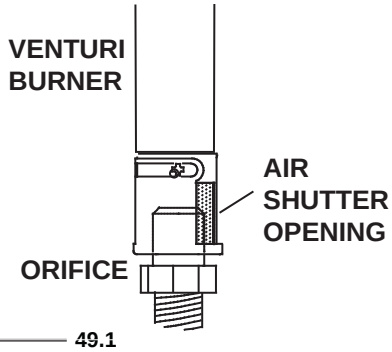

49.1

	AIR SHUTTER
NG	1/4"
LP	7/16"

To access the air shutter, remove the two screws that secure the cover to the housing, taking care not to damage the gasket. Replacement gaskets can be ordered from your local authorized dealer / distributor.

<u>NOTE:</u> Ensure burner is seated onto orifice.

9.3 FLAME CHARACTERISTICS

It's important to periodically perform a visual check of the pilot and burner flames. Compare them to the illustrations provided. If any flames appear abnormal call a service person.

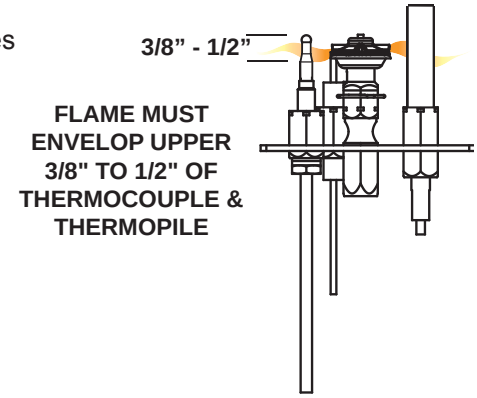

54.2

9.4 RESTRICTING VERTICAL VENTS

Vertical terminations may display a very active flame. As this appearance is not desirable, the vent exit must be restricted using restrictor plate, W500-0205. This reduces the velocity of the exhaust gases, slowing down the flame pattern and creating a more traditional appearance.

Remove the two screws on either side of the exhaust collar inside the firebox. Install the plate as shown. Replace the screws.

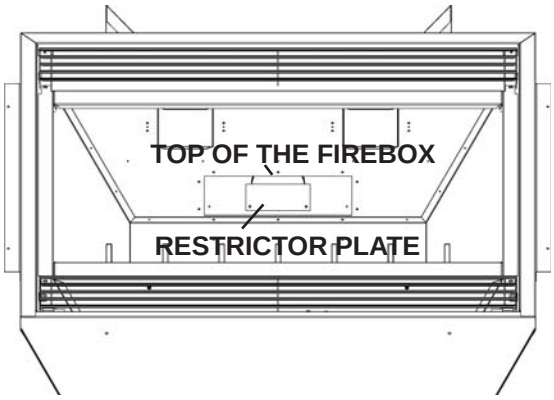

10.0 MAINTENANCE

⚠ WARNING

TURN OFF THE GAS AND ELECTRICAL POWER BEFORE SERVICING THE APPLIANCE.

APPLIANCE MAY BE HOT, DO NOT SERVICE UNTIL APPLIANCE HAS COOLED.

DO NOT USE ABRASIVE CLEANERS.

CAUTION: Label all wires prior to disconnection when servicing controls. Wiring errors can cause improper and dangerous operation. Verify proper operation after servicing. This appliance and its venting system should be inspected before use and at least annually by a qualified service person. The appliance area must be kept clear and free of combustible materials, gasoline or other flammable vapors and liquids. The flow of combustion and ventilation air must not be obstructed.

1. In order to properly clean the burner and pilot assembly, remove the logs, rocks and/or glass to expose both assemblies.

2. Keep the control compartment, media, burner, air shutter opening and the area surrounding the logs clean by vacuuming or brushing, at least once a year.

3. Check to see that all burner ports are burning. Clean out any of the ports which may not be burning or are not burning properly.

4. Check to see that the pilot flame is large enough to engulf the flame sensor and/or thermocouple / thermopile as well as reaches the burner.

5. Replace the cleaned logs, rocks or glass. Failure to properly position the media may cause carboning which can be distributed in the surrounding living area.

6. Check to see that the main burner ignites completely on all openings when turned on. A 5 to 10 second total light-up period is satisfactory. If ignition takes longer, consult your local authorized dealer / distributor.

7. Check that the gasketing on the sides, top and bottom of the door is not broken or missing. Replace if necessary.

8. If for any reason the vent air intake system is disassembled, re-install and re-seal per the instructions provided for the initial installation.

40.1

10.1 CARE OF GLASS

DO NOT CLEAN GLASS WHEN HOT! DO NOT USE ABRASIVE CLEANERS TO CLEAN GLASS.

Buff lightly with a clean dry soft cloth. Clean both sides of the glass after the first 10 hours of operation with a recommended fireplace glass cleaner. Thereafter clean as required. If the glass is not kept clean permanent discoloration and / or blemishes may result.

⚠ WARNING

HOT GLASS WILL CAUSE BURNS.

DO NOT TOUCH GLASS UNTIL COOLED.

NEVER ALLOW CHILDREN TO TOUCH GLASS.

5.1

10.2 GLASS / DOOR REPLACEMENT

⚠ WARNING
DO NOT USE SUBSTITUTE MATERIALS.
GLASS MAY BE HOT, DO NOT TOUCH GLASS UNTIL COOLED.
CARE MUST BE TAKEN WHEN REMOVING AND DISPOSING OF ANY BROKEN DOOR GLASS OR DAMAGED COMPONENTS. BE SURE TO VACUUM UP ANY BROKEN GLASS FROM INSIDE THE APPLIANCE BEFORE OPERATION.
DO NOT STRIKE, SLAM OR SCRATCH GLASS. DO NOT OPERATE APPLIANCE WITH GLASS REMOVED, CRACKED, BROKEN OR SCRATCHED.

A. Place the door frame face down careful not to scratch the paint.

B. Center the gasketed glass inside the door frame with the thick side of the gasket facing up.

C. Bend the glass retainers located along the edge of the door frame over the gasket holding the glass in place. Careful not to break the glass.

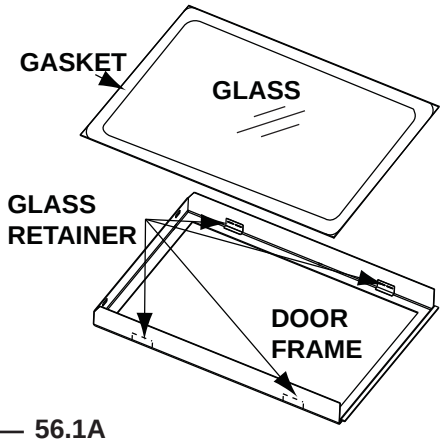

56.1A

11.0 REPLACEMENTS

⚠ WARNING

FAILURE TO POSITION THE PARTS IN ACCORDANCE WITH THIS MANUAL OR FAILURE TO USE ONLY PARTS SPECIFICALLY APPROVED WITH THIS APPLIANCE MAY RESULT IN PROPERTY DAMAGE OR PERSONAL INJURY.

**** THIS IS A FAST ACTING THERMOCOUPLE. IT IS AN INTEGRAL SAFETY COMPONENT. REPLACE ONLY WITH A FAST ACTING THERMOCOUPLE SUPPLIED BY WOLF STEEL LTD.**

Contact your dealer or the factory for questions concerning prices and policies on replacement parts. Normally all parts can be ordered through your Authorized dealer / distributor.

FOR WARRANTY REPLACEMENT PARTS, A PHOTOCOPY OF THE ORIGINAL INVOICE WILL BE REQUIRED TO HONOUR THE CLAIM.

When ordering replacement parts always give the following information:

- Model & Serial Number of appliance
- Installation date of appliance
- Part number
- Description of part
- Finish

*** IDENTIFIES ITEMS WHICH ARE NOT ILLUSTRATED. FOR FURTHER INFORMATION, CONTACT YOUR AUTHORIZED DEALER.**

41.2

COMPONENTS		
REF NO.	**PART NO.**	**DESCRIPTION**
1	W357-0001	PIEZO IGNITER
2	W680-0004	THERMOPILE
3	W680-0005	THERMOCOUPLE**
4	W010-0800	NATURAL GAS PILOT ASSEMBLY
4	W010-0801	PROPANE GAS PILOT ASSEMBLY
5	W455-0069	NATURAL GAS PILOT INJECTOR
5	W455-0068	PROPANE GAS PILOT INJECTOR
6	W725-0025	NATURAL GAS VALVE
6	W725-0026	PROPANE VALVE
7*	W385-0334	NAPOLEON® LOGO
8*	W750-0112	20FT OF WIRE
9	W010-0864	PAN BURNER
10	GL-658	LOG SET
11*	W361-0016	GLOWING EMBERS
12*	W550-0001	CHARCOAL EMBERS
13*	W550-0002	CHARCOAL LUMPS
14	W135-0297	REAR LOG (#1)
15	W135-0300	LEFT CROSSOVER LOG (#4)
16	W135-0302	RIGHT CROSSOVER LOG (#5)
17	W135-0298	SMALL LEFT LOG (#2)
18	W135-0299	SMALL RIGHT LOG (#3)
19	W010-2122	BLACK DOOR c/w GLASS
20	W456-0043	#43 NATURAL GAS ORIFICE
20	W456-0054	#54 PROPANE GAS ORIFICE
21*	W361-0014	VERMICULITE
22	W010-2116	ADJUSTABLE FIRESTOP
23*	W500-0205	RESTRICTOR PLATE
24*	W585-0138	VENT HEAT SHIELD, TOP PIECE
25*	W655-0222	VENT HEAT SHIELD, BOTTOM PIECE
26	W185-0020	GRATE
27*	W010-2109	ASSEMBLY, DOOR LATCH

FLEXIBLE VENT KITS

REF NO.	PART NO.	DESCRIPTION
GD420 (5FT)		
28*	W730-0010	5" FLEXIBLE VENT PIPE - 5.5FT C/W SPACERS
29*	W730-0012	8" FLEXIBLE VENT PIPE - 5.5FT
GD430 (10FT)		
30*	W730-0011	5" FLEXIBLE VENT PIPE - 11.5FT
31*	W730-0013	8" FLEXIBLE VENT PIPE - 11.5FT C/W SPACERS
32*	W010-0067	ASSEMBLY, SUPPORT RING (5/8)

TERMINAL KITS

REF NO.	PART NO.	DESCRIPTION
33	GD401-1	PERISCOPE
34	GD422-1	WALL TERMINAL KIT

ROOM TERMINAL KITS

REF NO.	PART NO.	DESCRIPTION
35*	GD410	1/12 TO 7/12 PITCH
36*	GD411	8/12 TO 12/12 PITCH
37*	GD412	FLAT ROOF
38	W490-0074	5/8 INNER/OUTER SLEEVE
39	W670-0007	5/8 TERMINAL
40	W170-0086	STORM COLLAR
41	W010-0453	ROOF SUPPORT
42	W263-0065	ROOF FLASHING
	W263-0066	
	W263-0055	

ACCESSORIES

REF NO.	PART NO.	DESCRIPTION
43*	W573-0007	10.3OZ TUBE HIGH TEMP SEALANT
44*	W660-0081	MILLIVOLT THERMOSTAT
45*	F40	ON/OFF REMOTE
46*	F50	THERMOSTATIC REMOTE
47	GZ550-1KT	BLOWER KIT
48*	B440-KT	BLOWER KIT
49*	W500-0033	VARIABLE SPEED SWITCH WALL MOUNTING PLATE
50*	W690-0005	THERMOSTAT, 110 VOLT - FOR USE WITH GA-566
51*	W660-0026	PROGRAMMABLE TIMER
52	GA-566	HOT AIR KIT
53	GA-72	HOT AIR EXHAUST KIT
54	GA-70	EXTENSION KIT 5FT
55*	ANI-K	ANDIRONS - BLACK
56*	ANI-G	ANDIRONS - GOLD PLATED
57*	270	PAINT, BLACK - 13OZ

ACCESSORIES		
REF NO.	**PART NO.**	**DESCRIPTION**
58*	W175-0166	5" COUPLER
59*	W175-0002	8" COUPLER
60*	W500-0206	TERMINAL EXTENSION PLATE
61	GD-501	HEAT GUARD
62*	W585-0096	SOFFIT HEAT SHIELD
63*	W010-0067	ASSEMBLY, SUPPORT RING (5/8)
64*	W175-0170	DURA-VENT ZERO CLEARANCE ADAPTOR
65	W170-0086	VENT PIPE COLLAR
66	W585-0092	VENT PIPE SHIELD
67*	W175-0211	CONVERSION KIT - NG TO LP
68*	W175-0248	CONVERSION KIT - LP TO NG

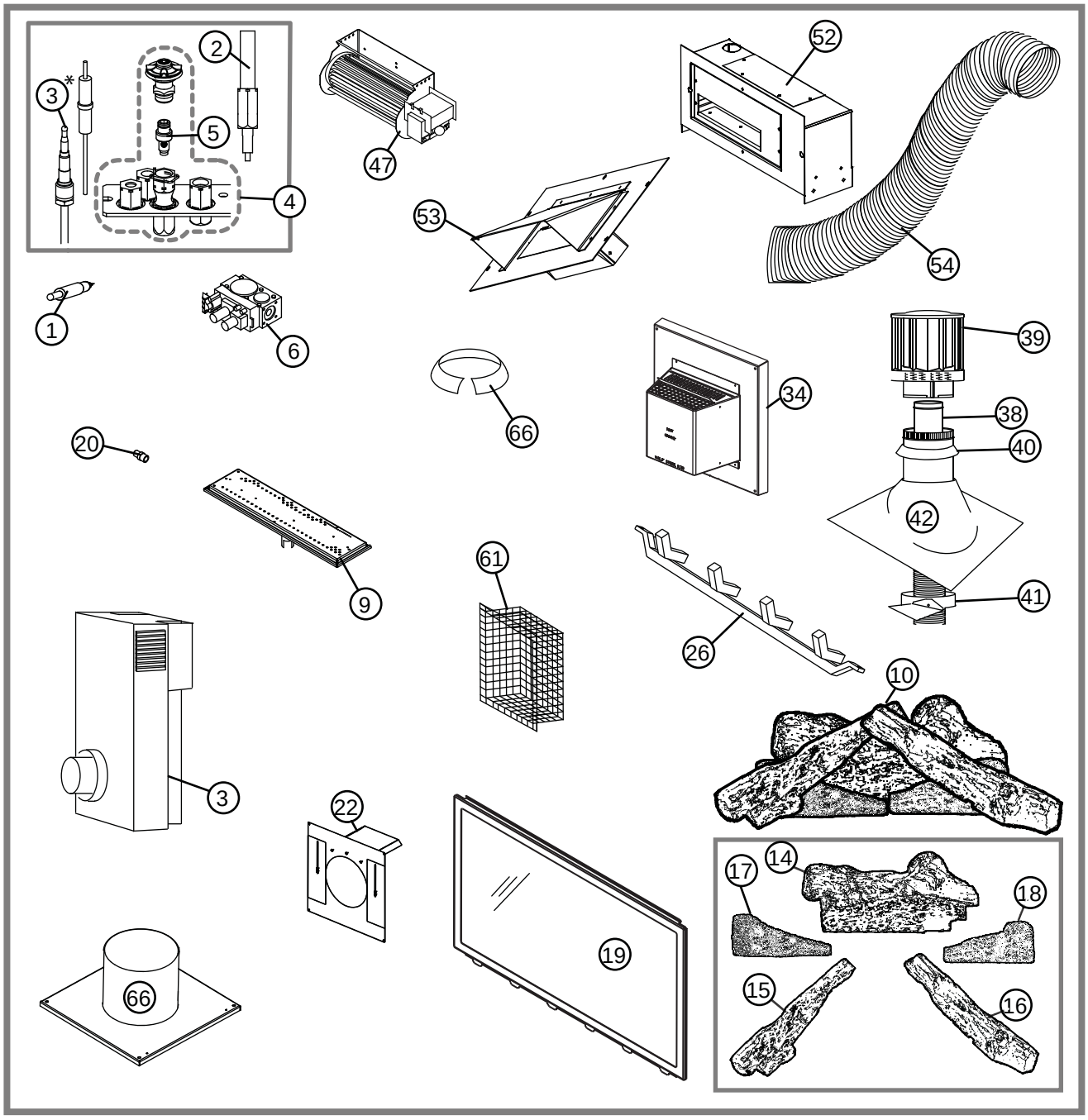

12.0 TROUBLESHOOTING

⚠ WARNING

ALWAYS LIGHT THE PILOT WHETHER FOR THE FIRST TIME OR IF THE GAS SUPPLY HAS RAN OUT, WITH THE GLASS DOOR OPEN OR REMOVED.

TURN OFF THE GAS AND ELECTRICAL POWER BEFORE SERVICING THE APPLIANCE.

APPLIANCE MAY BE HOT, DO NOT SERVICE UNTIL APPLIANCE HAS COOLED.

DO NOT USE ABRASIVE CLEANERS.

SYMPTOM	PROBLEM	TEST SOLUTION
Main burner goes out; pilot stays on.	Pilot flame is not large enough or not engulfing the thermopile.	- Turn up the pilot flame. - Replace pilot assembly.
	Thermopile shorting.	- Clean thermopile connection to the valve. Reconnect. - Replace thermopile / valve.
	Remote wall switch wire is too long; too much resistance in the system.	- Shorten wire to correct length or wire gauge.
	Faulty thermostat or switch.	- Replace.
Main burner goes out; pilot goes out.	Refer to “MAIN BURNER GOES OUT; PILOT STAYS ON”	
	Vent is blocked	- Check for vent blockage.
	Vent is re-circulating	- Check joint seals and installation
	Flexible vent has become disconnected from appliance.	- Re-attach to appliance. - Cap was not replaced.
Pilot goes out when the gas knob is released. **The gas valve has an interlock device which will not allow the pilot burner to be lit until the thermocouple has cooled. Allow approximately 60 seconds for the thermocouple to cool.**	System is not correctly purged	- Purge the gas line.
	Out of propane gas.	- Fill the tank.
	Pilot flame is not large enough.	- Turn up the pilot flame.
	Pilot flame is not engulfing the thermocouple	- Gently twist the pilot head to improve the flame pattern around the thermocouple.
	Thermocouple shorting / faulty.	- Loosen and tighten thermocouple. - Clean thermocouple and valve connection. - Replace thermocouple. - Replace valve.
	Faulty valve.	- Replace.
Pilot burning; no gas to main burner; gas knob is on ‘HI’; wall switch / thermostat is on.	Thermostat or switch is defective	- Connect a jumper wire across the wall switch terminals; if main burner lights, replace switch / thermostat.
	Wall switch wiring is defective.	- Disconnect the switch wires & connect a jumper wire across terminals 1 & 3; if the main burner lights, check the wires for defects and/or replace wires.
	Main burner orifice is plugged.	- Remove stoppage in orifice.
	Faulty valve.	- Replace.
Pilot goes out while standing; Main burner is in ‘OFF’ position.	Gas piping is undersized.	- Turn on all gas appliances and see if pilot flame flutters, diminishes or extinguishes, especially when main burner ignites. Monitor appliance supply working pressure. - Check if supply piping size is to code. Correct all undersized piping.
Main burner flame is a blue, lazy, transparent flame.	Blockage in vent.	- Remove blockage. In really cold conditions, ice buildup may occur on the terminal and should be removed as required. To minimize this from happening again, it is recommended that the vent lengths that pass through unheated spaces (attics, garages, crawl spaces) be wrapped with an insulated mylar sleeve. Prevent sleeve from sagging. Contact your local authorized dealer for more information.

SYMPTOM	PROBLEM	TEST SOLUTION
Pilot will not light. 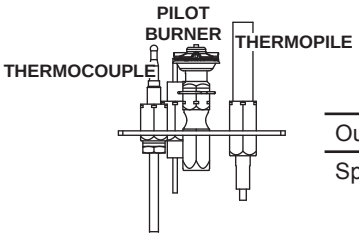 	No spark at pilot burner.	- Check if pilot can be lit by a match. - Check that the wire is connected to the push button igniter. - Check if the push button igniter needs tightening. - Replace the wire if the wire insulation is broken or frayed. - Replace the electrode if the ceramic insulator is cracked or broken. - Replace the push button ignitor
	Out of propane gas.	- Fill the tank.
	Spark gap is incorrect.	- Spark gap should be 0.150” to 0.175” (5/32” to 11/64” approx.) from the electrode tip and the pilot burner. To ensure proper electrode location, tighten securing nut (finger tight plus 1/4 turn).
	No gas at the pilot burner.	- Check that the manual valve is turned on. - Check the pilot orifice for blockage. - Replace the valve. - Call the gas distributor.
Flames are consistently too large or too small. Carboning occurs. 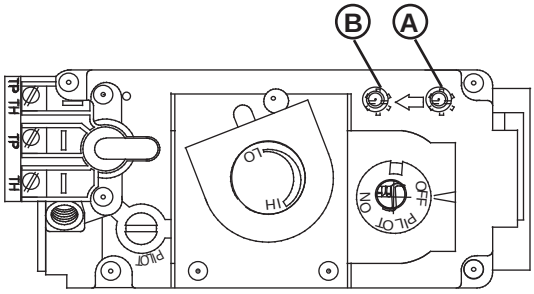 	Unit is over-fired or underfired.	- Check pressure readings: - Inlet pressure can be checked by turning screw (A) counter-clockwise 2 or 3 turns and then placing pressure gauge tubing over the test point. Gauge should read 7” (minimum 4.5”) water column for natural gas or 13” (minimum 11”) water column for propane. Check with main burner is operating on ‘HI’. - Outlet pressure can be checked the same as above using screw (B). Gauge should read 3.5” water column for natural gas or 10” water column for propane. Check that main burner is operating on ‘HI’. - AFTER TAKING PRESSURE READINGS, BE SURE TO TURN SCREWS CLOCKWISE FIRMLY TO RESEAL. DO NOT OVER TORQUE. - Leak test with a soap and water solution.
Flames are very aggressive.	Door is ajar.	- Ensure the mechanical means of securing the door is providing a tight seal.
Carbon is being deposited on glass, logs or combustion chamber surfaces.	Air shutter has become blocked.	- Ensure air shutter opening is free of lint or other obstructions.
	Flame is impinging on the logs or combustion chamber.	- Check that the logs are correctly positioned. - Open air shutter to increase the primary air. - Check the input rate: check the manifold pressure and orifice size as specified by the rating plate values. - Check that the door gasketing is not broken or missing and that the seal is tight. - Check that both vent liners are free of holes and well sealed at all joints. - Check that minimum rise per foot has been adhered to for any horizontal venting.
White / grey film forms.	Sulphur from fuel is being deposited on glass, logs or combustion chamber surfaces.	- Clean the glass with a recommended gas appliance glass cleaner. - DO NOT CLEAN GLASS WHEN HOT. - If deposits are not cleaned off regularly, the glass may become permanently marked.
Exhaust fumes smelled in room, headaches.	Appliance is spilling.	- Ensure exhaust bracket gasket seal. - Check door seal and relief flap seal. - Check for chimney blockage. - Check that chimney is installed to building code. - Room is in negative pressure; increase fresh air supply. - Check cap gasket on the flue pipe assembly.
Remote wall switch is in ’OFF’ position; main burner comes on when gas knob is turned to ‘ON’ position.	Wall switch is mounted upside down.	- Reverse.
	Remote wall switch is grounding.	- Replace.
	Remote wall switch wire is grounding.	- Check for ground (short); repair ground or replace wire.
	Faulty valve.	- Replace.

13.0 WARRANTY

NAPOLEON® products are manufactured under the strict Standard of the world recognized ISO 9001 : 2008 Quality Assurance Certificate.

NAPOLEON® products are designed with superior components and materials assembled by trained craftsmen who take great pride in their work. The burner and valve assembly are leak and test-fired at a quality test station. The complete appliance is again thoroughly inspected by a qualified technician before packaging to ensure that you, the customer, receives the quality product that you expect from NAPOLEON®.

NAPOLEON® GAS APPLIANCE PRESIDENT'S LIFETIME LIMITED WARRANTY

The following materials and workmanship in your new NAPOLEON® gas appliance are warranted against defects for as long as you own the appliance. This covers: combustion chamber, heat exchanger, stainless steel burner, phazer™ logs and embers, rocks, ceramic glass (thermal breakage only), gold plated parts against tarnishing, porcelainized enameled components and aluminum extrusion trims.*

Electrical (110V and millivolt) components and wearable parts such as blowers, gas valves, thermal switch, switches, wiring, remote controls, ignitor, gasketing, and pilot assembly are covered and NAPOLEON® will provide replacement parts free of charge during the first year of the limited warranty.*

Labour related to warranty repair is covered free of charge during the first year. Repair work, however, requires the prior approval of an authorized company official. Labour costs to the account of NAPOLEON® are based on a predetermined rate schedule and any repair work must be done through an authorized NAPOLEON® dealer.

* Construction of models vary. Warranty applies only to components included with your specific appliance.

CONDITIONS AND LIMITATIONS

NAPOLEON® warrants its products against manufacturing defects to the original purchaser only. Registering your warranty is not necessary. Simply provide your proof of purchase along with the model and serial number to make a warranty claim. NAPOLEON® reserves the right to have its representative inspect any product or part thereof prior to honouring any warranty claim. Provided that the purchase was made through an authorized NAPOLEON® dealer your appliance is subject to the following conditions and limitations:

Warranty coverage begins on the date of original installation.

This factory warranty is non-transferable and may not be extended whatsoever by any of our representatives.

The gas appliance must be installed by a licensed, authorized service technician or contractor. Installation must be done in accordance with the installation instructions included with the product and all local and national building and fire codes.

This limited warranty does not cover damages caused by misuse, lack of maintenance, accident, alterations, abuse or neglect and parts installed from other manufacturers will nullify this warranty.

This limited warranty further does not cover any scratches, dents, corrosion or discoloring caused by excessive heat, abrasive and chemical cleaners nor chipping on porcelain enamel parts, mechanical breakage of PHAZER™ logs and embers.

This warranty extends to the repair or replacement of warranted parts which are defective in material or workmanship provided that the product has been operated in accordance with the operation instructions and under normal conditions.

After the first year, with respect to this President's Lifetime Limited Warranty, NAPOLEON® may, at its discretion, fully discharge all obligations with respect to this warranty by refunding to the original warranted purchaser the wholesale price of any warranted but defective part(s).

NAPOLEON® will not be responsible for installation, labour or any other expenses related to the reinstallation of a warranted part and such expenses are not covered by this warranty.

Notwithstanding any provisions contained in the President's Lifetime Limited Warranty, NAPOLEON'S responsibility under this warranty is defined as above and it shall not in any event extend to any incidental, consequential or indirect damages.

This warranty defines the obligations and liability of NAPOLEON® with respect to the NAPOLEON® gas appliance and any other warranties expressed or implied with respect to this product, its components or accessories are excluded.

NAPOLEON® neither assumes, nor authorizes any third party to assume, on its behalf, any other liabilities with respect to the sale of this product.

NAPOLEON® will not be responsible for: over-firing, downdrafts, spillage caused by environmental conditions such as rooftops, buildings, nearby trees, hills, mountains, inadequate vents or ventilation, excessive venting configurations, insufficient makeup air, or negative air pressures which may or may not be caused by mechanical systems such as exhaust fans, furnaces, clothes dryers, etc.

Any damages to the appliance, combustion chamber, heat exchanger, plated trim or other components due to water, weather damage, long periods of dampness, condensation, damaging chemicals or cleaners will not be the responsibility of NAPOLEON®.

All parts replaced under the President's Limited Lifetime Warranty Policy are subject to a single claim.

During the first 10 years NAPOLEON® will replace or repair the defective parts covered by the lifetime warranty at our discretion free of charge. From 10 years to life, NAPOLEON® will provide replacement parts at 50% of the current retail price.

All parts replaced under the warranty will be covered for a period of 90 days from the date of their installation.

The manufacturer may require that defective parts or products be returned or that digital pictures be provided to support the claim. Returned products are to be shipped prepaid to the manufacturer for investigation. If a product is found to be defective, the manufacturer will repair or replace such defect.

Before shipping your appliance or defective components, your dealer must obtain an authorization number. Any merchandise shipped without authorization will be refused and returned to sender.

Shipping costs are not covered under this warranty.

Additional service fees may apply if you are seeking warranty service from a dealer.

Warranty labour allowance is only for the replacement of the warranted part. Travel, diagnostic tests, shipping and other related charges are not covered by this warranty.

ALL SPECIFICATIONS AND DESIGNS ARE SUBJECT TO CHANGE WITHOUT PRIOR NOTICE DUE TO ON-GOING PRODUCT IMPROVEMENTS. NAPOLEON® IS A REGISTERED TRADEMARK OF WOLF STEEL LTD.

2.1B

14.0 SERVICE HISTORY

Appliance Service History

This heater must be serviced annually depending on usage.

Date	Dealer Name	Service Technician Name	Service Performed	Special Concerns

15.0 NOTES

44.1